Type: LPRT/2

Phase Failure, Phase Sequence, Under Voltage plus Time Delay

Terminal Protection to IP20



Dims: to DIN 43880
W. 17.5mm

- **Compact 17.5mm DIN rail housing**
- **Microprocessor based**
- **True R.M.S. monitoring measuring phase to phase (3-wire) or phase to neutral (4-wire) voltages**
- **Selectable nominal voltages to suit most popular 3-wire or 4-wire supply voltages**
- **Monitors own supply and detects an Under voltage condition on one or more phases**
- **Detects incorrect phase sequence, phase loss and neutral loss[1]**
- **Adjustment for Under voltage trip level**
- **Adjustment for Time delay**
- **DPDT relay output 5A**
- **Green LED indication for supply status**
- **Red LED indication for relay status**

[1] Only when 4-wire monitoring selected

ISO 9001:2015 Cert. No. 14125771

FUNCTION DIAGRAM

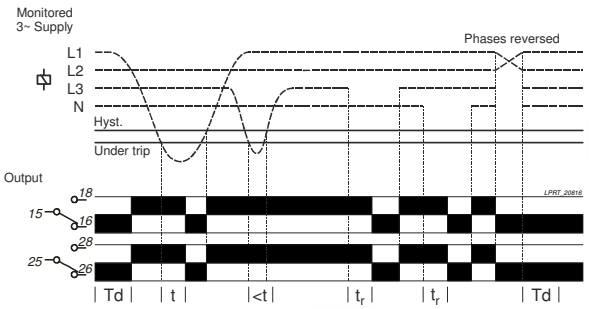

INSTALLATION AND SETTING

Installation work must be carried out by qualified personnel.

- BEFORE INSTALLATION, ISOLATE THE SUPPLY.
- Connect the unit as required. The Connection Diagram below shows a typical installation, whereby the supply to a load is being monitored by the Phase monitoring relay. If a fault should occur (i.e. fuse blowing), the relay will de-energise and assuming control of the external Contactor, de-energise the Contactor as well.
- Only connect the Neutral if available and 4-wire monitoring is required.

Applying power.

- Set the "Nominal (Un)" ❸ voltage selector to match that of the voltage being monitored.
- Set the "Under %" ❺ adjustment to minimum. Set the "Delay (t)" ❹ to minimum.
- Apply power and the green "Power supply" ❶ LED will illuminate. The red LED ❷ will illuminate and relay energise after the short Power on delay (Td).
- Refer to the troubleshooting table if the unit fails to operate correctly.

Setting the unit (with power applied).

- Accurate setting can be achieved by adjusting the trip level "Under (%)" until the unit trips (relay de-energises) then by decreasing the trip level "Under (%)" until the relay re-energises. Close setting of the trip level ensures the unit will detect a phase loss even with a large percentage of re-generative voltage.
- In order to set the unit as previously described but without causing disruption to the equipment being controlled/monitored, set the "Delay (t)" to maximum. It will now be possible to establish the trip point when the red LED starts to flash. Decrease the trip level setting to stop the LED flashing.
  (Note: If the time delay is allowed to expire, the output relay will de-energise)
- If large supply variations are anticipated, the trip level should be set further from the nominal voltage.
- Set the "Delay (t)" as required. (Note that the delay is only effective should the supply drop below the set trip level. However, if during an under voltage condition the supply drops below the 2nd under voltage trip level, any set time delay is automatically cancelled and the relays de-energise).

Troubleshooting.

The table below shows the status of the unit during a particular fault condition.

Supply fault	Green LED ❶	Red LED ❷	Relay
Phase or neutral missing	LED's flash alternately		De-energised
Phases reversed (no delay)	Flashing	Off	De-energised
Under voltage condition (during timing)	On	Flashing	Energised for delay (t)
Under voltage condition (after timing)	On	Off	De-energised
Phases < fixed under trip level [2]	On	Off	De-energised

TECHNICAL SPECIFICATION

Supply/monitoring voltage Un (L1, L2, L3, (N)):	3-wire monitoring 3-Wire		4-wire monitoring 4-Wire	
	380, 400, 415V AC		220, 230, 240V AC	
Frequency range:	48 – 63Hz			
Supply variation:	243 - 540V AC (L>L)			
Overvoltage category:	III (IEC 60664)			
Rated impulse withstand voltage:	4kV (1.2/50µS) IEC 60664			
Power consumption (max.):	2.5VA			
Monitoring mode:	Under voltage			
Trip levels:				
Under [2]:	Fixed ± 2% *see below*			
Under:	75 – 95% of Un			
Measuring ranges:	Nominal (Un)	Under [2]	Under	
3-wire (L>L)	**380V**	243V	285 – 361V	
	400V	256V	300 – 380V	
	415V	265V	311 – 394V	
4-wire (L>N)	**220V**	140V	165 – 209V	
	230V	147V	173 – 219V	
	240V	153V	180 – 228V	
Hysteresis:	≈ 2% of trip level (factory set)			
Setting accuracy:	± 3%			
Repeat accuracy:	± 0.5% at constant conditions			
Immunity from micro power cuts:	<50ms			
Response time (t_r):	≈ 50ms			
Time delay (t):	0.2 – 10s (± 5%)			
	Note: actual delay (t) = adjustable delay + response time			
Power on delay (Td):	≈ 1s (worst case = Td x 2)			
Reset time:	50 – 100ms			
Power on indication:	Green LED			
Relay status indication:	Red LED			
Ambient temperature:	-20 to +60°C			
Relative humidity:	+95% max.			
Output **(15, 16, 18 / 25, 26, 28)**:	DPDT relay			
Output rating:	AC1		250V 5A (1250VA)	
	AC15		250V 2A	
	DC1		25V 5A (125W)	
Electrical life:	≥ 150,000 ops at rated load			
Dielectric voltage:	2kV AC (rms) IEC 60947-1			
Rated impulse withstand voltage:	4kV (1.2/50µS) IEC 60664			
Housing:	Orange flame retardant UL94			
Weight:	90g			
Mounting option:	On to 35mm symmetric DIN rail to BS EN 60715 or direct surface mounting via 2 x M3.5 or 4BA screws using the black clips provided on the rear of the unit.			
Terminal conductor size	≤ 2.5mm² solid or stranded			
Terminal screw:	M2.5			
Tightening torque:	0.4Nm (3.5Lb-In) Max.			
Approvals:	Conforms to IEC.			
	UL LISTED IND. CONT. EQ. E111187			
	CE, and RoHS Compliant.			
	EMC:			
	Immunity: EN 61000-6-2 Emissions: EN 61000-6-4			

Note:
"L>L" has the same meaning as "phase to phase" and "L>N", the same as "phase to neutral"

CONNECTION DIAGRAM

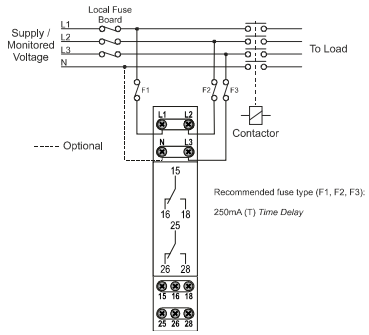

SETTING DETAILS

1. Power supply status (Green) LED
2. Relay output / Timing status (Red) LED
3. "Nominal (Un)" voltage selector
4. "Delay (t)" adjustment
5. "Under %" trip level adjustment^

^scaled as % of the selected nominal voltage "Un"

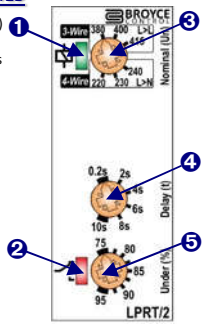

DIMENSIONS

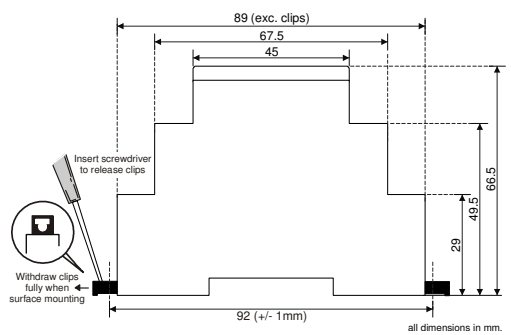

Broyce Control Ltd., Pool Street, Wolverhampton, West Midlands WV2 4HN. England
Tel: +44 (0) 1902 773746 Fax: +44 (0) 1902 420639 Email: sales@broycecontrol.com Web: www.broycecontrol.com

The Information provided in this literature is believed to be accurate (subject to change without prior notice); however, use of such information shall be entirely at the user's own risk.