BF18T2D012

FOUR-POLE CONTACTOR, IEC OPERATING CURRENT ITH (AC1) = 32A, DC COIL, 12VDC, 2NO AND 2NC



Product designation			Power contactor
Product type designation			BF18
Contact characteristics			
Number of poles		Nr.	4
Rated insulation voltage Ui IEC/EN		V	690
Rated impulse withstand voltage Uimp		kV	6
Operational frequency			
	min	Hz	25
	max	Hz	400
IEC Conventional free air thermal current Ith		A	32
Operational current Ie			
	AC-1 (≤40°C)	A	32
	AC-1 (≤55°C)	A	26
	AC-1 (≤70°C)	A	23
	AC-3 (≤440V ≤55°C)	A	18
	AC-4 (400V)	A	8.5
Rated operational power AC-1 (T≤40°C)			
	230V	kW	12
	400V	kW	21
	500V	kW	26
	690V	kW	36
Short-time allowable current for 10s (IEC/EN60947-1)		A	200
Protection fuse			
	gG (IEC)	A	32
	aM (IEC)	A	20
Making capacity (RMS value)		A	180
Breaking capacity at voltage			
	440V	A	144
	500V	A	120
	690V	A	94
Resistance per pole (average value)		mΩ	2.5
Power dissipation per pole (average value)			
	Ith	W	2.6
	AC3	W	0.8
Tightening torque for terminals			
	min	Nm	1.5
	max	Nm	1.8
	min	lbin	1.1
	max	lbin	1.5
Tightening torque for coil terminal			
	min	Nm	0.8
	max	Nm	1
	min	lbin	0.8
	max	lbin	0.74
Max number of wires simultaneously connectable		Nr.	2

The characteristics described in this document are subject to updates or modifications at any time. The descriptions, technical and functional information, illustrations and instructions in this brochure are purely illustrative, and are consequently not contractually binding

Conductor section				
	AWG/Kcmil			
		max		10
	Flexible w/o lug conductor section			
		min	mm²	1
		max	mm²	6
	Flexible c/w lug conductor section			
		min	mm²	1
		max	mm²	4
	Flexible with insulated spade lug conductor section			
		min	mm²	1
		max	mm²	4
Power terminal protection according to IEC/EN 60529				IP20 when properly wired
Mechanical features				
Operating position				
		normal		Vertical plan
		allowable		±30°
Fixing				Screw / DIN rail 35mm
Weight			g	495
Conductor section				
	AWG/kcmil conductor section			
		max		10
Operations				
Mechanical life			cycles	20000000
Electrical life			cycles	1600000
Safety related data				
Performance level B10d according to EN/ISO 13489-1				
		rated load	cycles	1600000
		mechanical load	cycles	20000000
Mirror contats according to IEC/EN 609474-4-1				YES
EMC compatibility				yes
DC coil operating				
DC rated control voltage			V	12
DC operating voltage				
	pick-up			
		min	%Us	70
		max	%Us	125
	drop-out			
		min	%Us	10
		max	%Us	40
Average coil consumption ≤20°C				
		in-rush	W	5.4
		holding	W	5.4
Max cycles frequency				
Mechanical operation			cycles/h	3600
Operating times				
Average time for Us control				
	in AC			
		Closing NO		
		min	ms	8
		max	ms	24

The characteristics described in this document are subject to updates or modifications at any time. The descriptions, technical and functional information, illustrations and instructions in this brochure are purely illustrative, and are consequently not contractually binding

		Opening NO			
			min	ms	10
			max	ms	20
		Closing NC			
			min	ms	14
			max	ms	28
		Opening NC			
			min	ms	7
			max	ms	18
	in DC				
		Closing NO			
			min	ms	54
			max	ms	66
		Opening NO			
			min	ms	14
			max	ms	17
		Closing NC			
			min	ms	24
			max	ms	30
		Opening NC			
			min	ms	47
			max	ms	57
UL technical data					
Full-load current (FLA) for three-phase AC motor					
			at 480V	A	14
			at 600V	A	17
Yielded mechanical performance					
	for single-phase AC motor				
			110/120V	HP	1
			230V	HP	3
	for three-phase AC motor				
			200/208V	HP	5
			220/230V	HP	5
			460/480V	HP	10
			575/600V	HP	15
General USE					
	Contactor				
			AC current	A	32
Ambient conditions					
Temperature					
	Operating temperature				
			min	°C	-50
			max	°C	70
	Storage temperature				
			min	°C	-60
			max	°C	80
Max altitude				m	3000
Resistance & Protection					
Pollution degree					3
Dimensions					

The characteristics described in this document are subject to updates or modifications at any time. The descriptions, technical and functional information, illustrations and instructions in this brochure are purely illustrative, and are consequently not contractually binding

BF18T2D012

FOUR-POLE CONTACTOR, IEC OPERATING CURRENT ITH (AC1) = 32A, DC COIL, 12VDC, 2NO AND 2NC

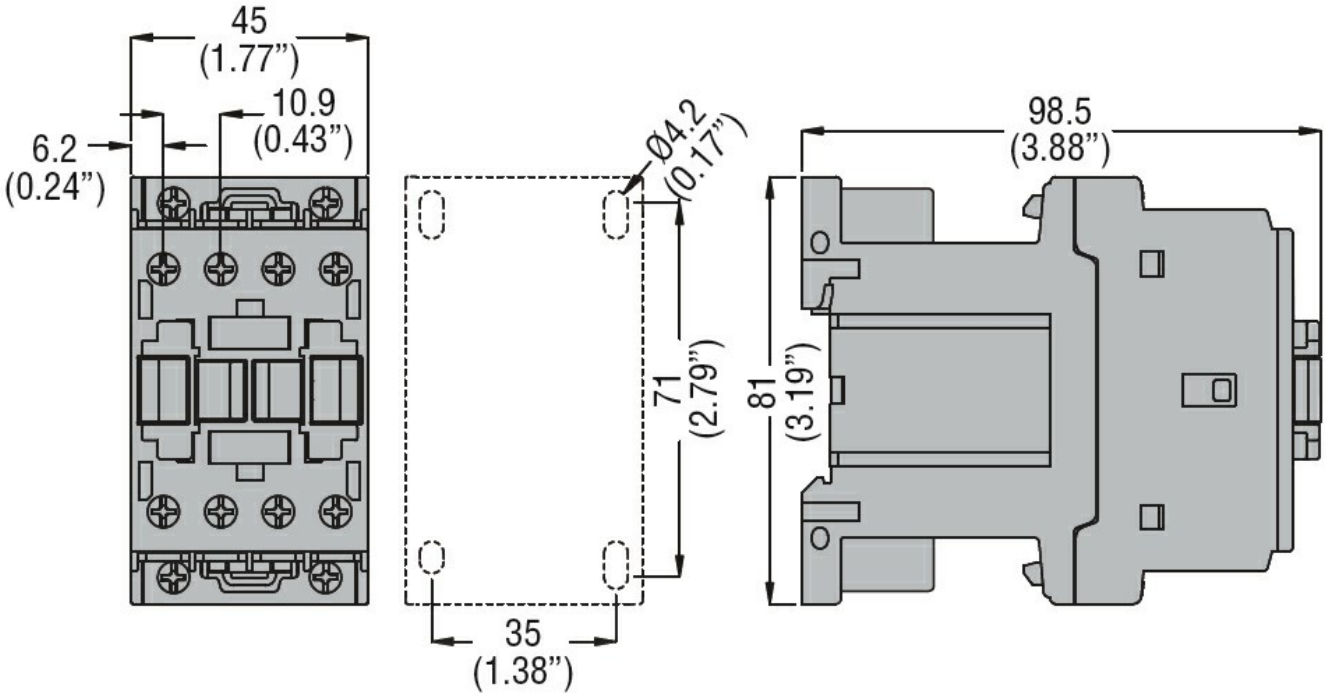

Wiring diagrams

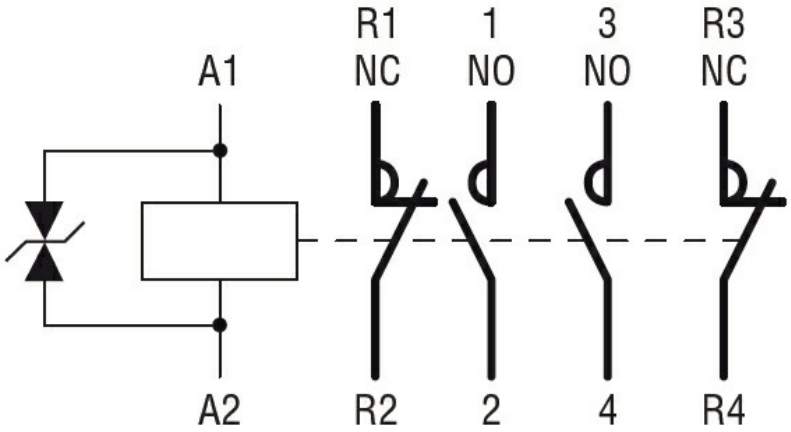

Certifications and compliance

Compliance

CSA C22.2 n° 60947-1
CSA C22.2 n° 60947-4-1
IEC/EN/BS 60947-1
IEC/EN/BS 60947-4-1
UL 60947-1
UL 60947-4-1

Certificates

CCC
cULus
EAC

ETIM classification

ETIM 8.0	EC000066 - Power contactor, AC switching

The characteristics described in this document are subject to updates or modifications at any time. The descriptions, technical and functional information, illustrations and instructions in this brochure are purely illustrative, and are consequently not contractually binding