sferaco
VALVES & FITTINGS

REF. 509

BRASS BALL VALVE ACS PN40 REFERENCE +









Size :	DN 1/4" to 4"
Ends :	Male , Female BSP
Min Temperature :	- 10°C
Max Temperature :	+ 120°C
Max Pressure :	40 Bars
Specifications :	Anti blow-out stem PTFE packing Full bore
Materials :	Brass

Information provided as an indication and subject to possible modification

sferaco
VALVES & FITTINGS

REF. 509

BRASS BALL VALVE ACS PN40 REFERENCE +

SPECIFICATIONS :

- Full bore
- Anti blow-out stem
- Solid ball
- PTFE packing
- Flat steel handle or aluminium butterfly handle
- Handle nut Dacromet coated (salt spray protection)
- Marking body " 9S " with ACS, fabrication date and logo
- ACS number on the handle
- Reversible handle

USE :

- Water distribution
- Min temperature Ts : - 10°C
- Max temperature Ts :+ 120°C
- Max Pressure Ps : 40 bars up to DN 1" , 30 bars in 1"1/4 , 25 bars in 1"1/2 , 20 bars in 2" and 10 bars over

RANGE :

- Female / Female with blue flat steel handle **Ref. 501** DN 1/4" to 4"
- Female / Female with red flat steel handle **Ref. 509** DN 1/4" to 4"
- Female / Female with red butterfly handle **Ref. 525** DN 1/4" to 1"
- Male / Female with blue flat steel handle **Ref. 517** DN 1/4" to 2"
- Male / Female with red flat steel handle **Ref. 571** DN 1/4" to 2"
- Male / Female with red butterfly handle **Ref. 570** DN 1/4" to 1"
- Male / Male with blue flat steel handle **Ref. 518** DN 3/8" to 2"
- Male / Male with red flat steel handle **Ref. 566** DN 3/8" to 2"
- Male / Male with red butterfly handle **Ref. 565** DN 3/8" to 1"
- Female / Female with drainer with red flat steel handle **Ref. 510** DN 1/2" to 2"
- Female / Female with drainer with red butterfly handle **Ref. 530** DN 1/2" to 1"

BRASS BALL VALVE ACS PN40 REFERENCE +

MATERIALS FEMALE – FEMALE TYPE :

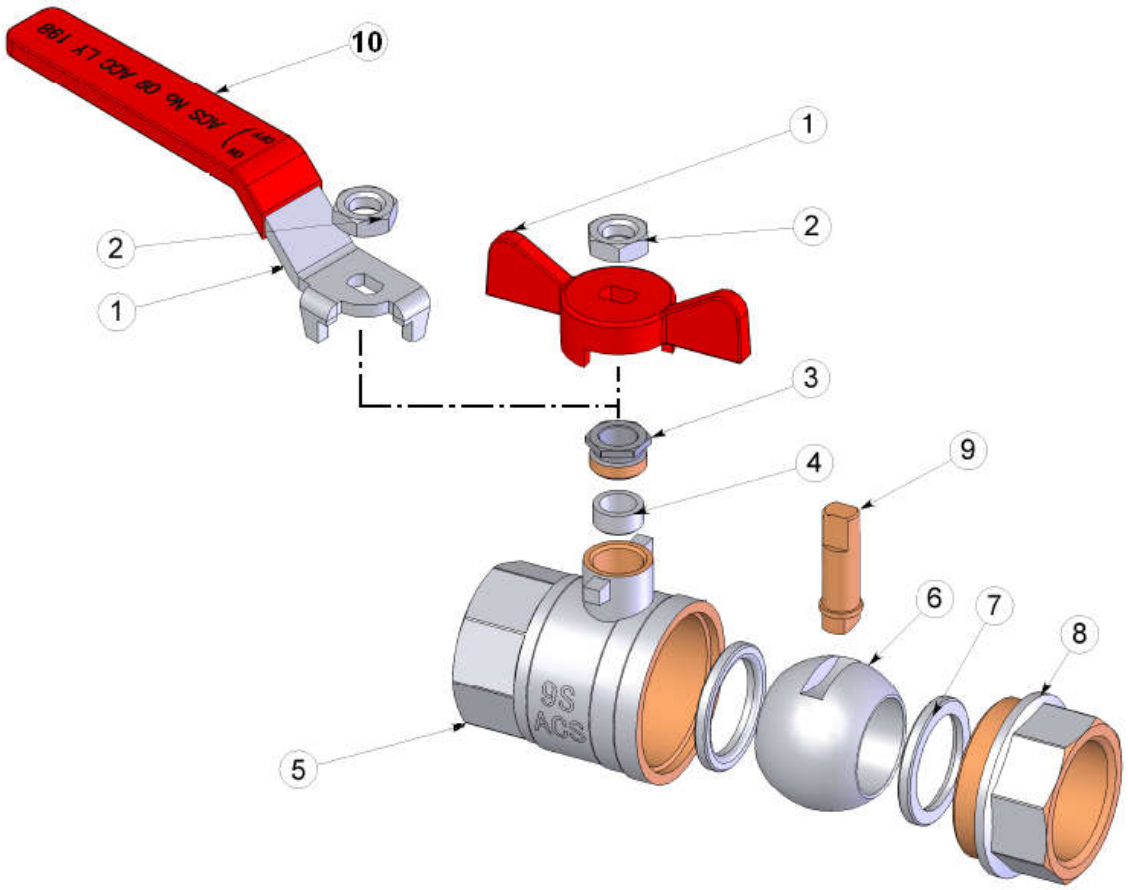

Item	Designation	Materials 501-509	Materials 525
1	Handle	Steel Q235	Aluminium
2	Handle nut	Steel Q235 Dacromet coated	
3	Packing nut	Brass CW 614 N according to EN 12165	
4	Packing	PTFE	
5	Body (external)	Brass CW 617 N according to EN 12165 nickeled	
5	Body (internal)	Brass CW 617 N according to EN 12165	
6	Ball	Brass CW 614 N according to EN 12165 chromed	
7	Seat	PTFE	
8	Bonnet (external)	Brass CW 617 N according to EN 12165 nickeled	
8	Bonnet (internal)	Brass CW 617 N according to EN 12165	
9	Stem	Brass CW 614 N according to EN 12165	
10	Handle cover	Plastic	-

Information provided as an indication and subject to possible modification

BRASS BALL VALVE ACS PN40 REFERENCE +

MATERIALS MALE – FEMALE TYPES:

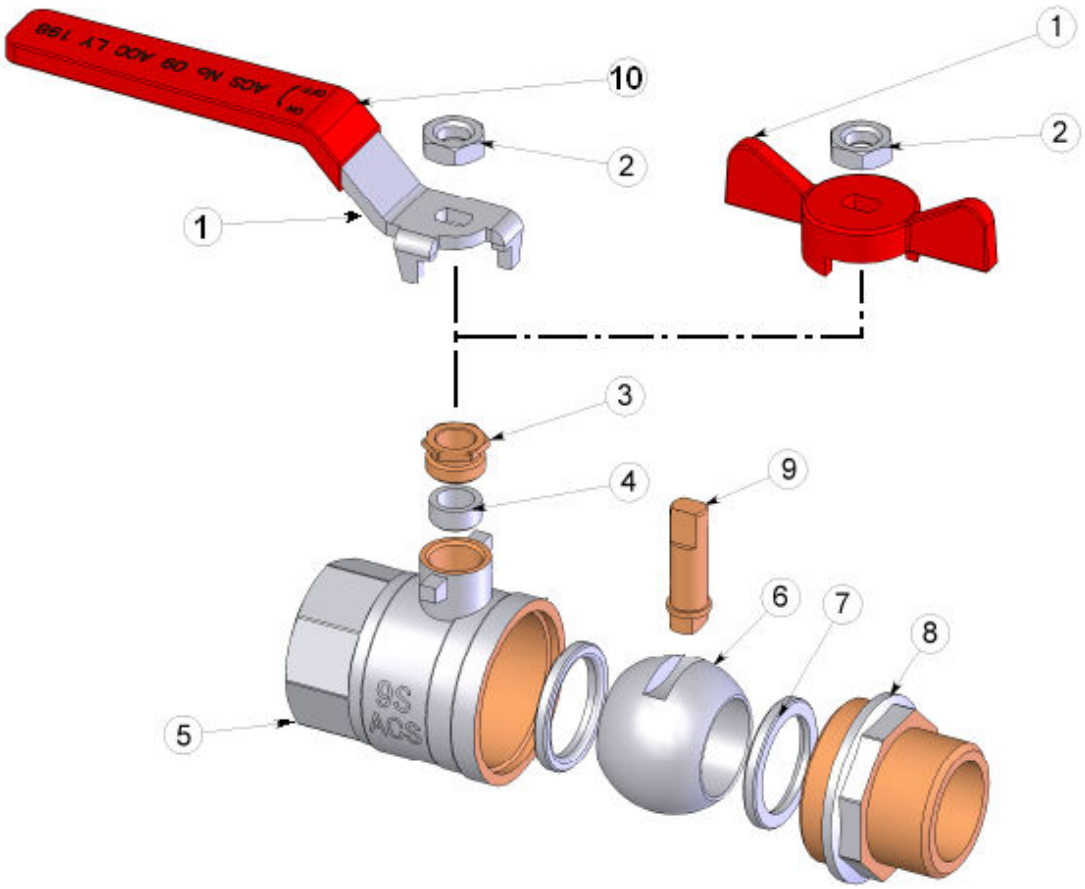

Item	Designation	Materials 517-571	Materials 570
1	Handle	Steel Q235	Aluminium
2	Handle nut	Steel Q235 Dacromet coated	
3	Packing nut	Brass CW 614 N according to EN 12165	
4	Packing	PTFE	
5	Body (external)	Brass CW 617 N according to EN 12165 nickeled	
5	Body (internal)	Brass CW 617 N according to EN 12165	
6	Ball	Brass CW 614 N according to EN 12165 chromed	
7	Seat	PTFE	
8	Bonnet (hexagonal)	Brass CW 617 N according to EN 12165 nickeled	
8	Bonnet	Brass CW 617 N according to EN 12165	
9	Stem	Brass CW 614 N according to EN 12165	
10	Handle cover	Plastic	-

BRASS BALL VALVE ACS PN40 REFERENCE +

MATERIALS MALE – MALE TYPES :

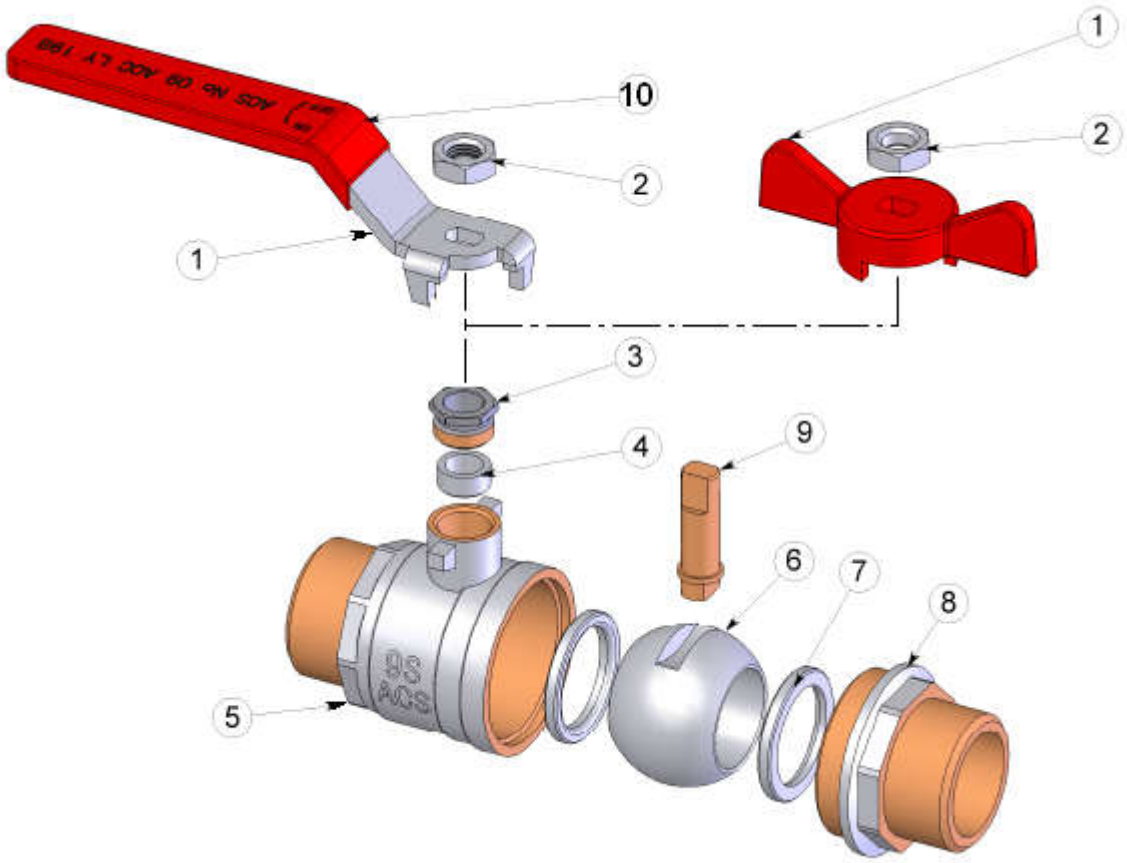

Item	Designation	Materials 518-566	Materials 565
1	Handle	Steel Q235	Aluminium
2	Handle nut	Steel Q235 Dacromet coated	
3	Packing nut	Brass CW 614 N according to EN 12165	
4	Packing	PTFE	
5	Body (external)	Brass CW 617 N according to EN 12165 nickeled	
5	Body (internal)	Brass CW 617 N according to EN 12165	
6	Ball	Brass CW 614 N according to EN 12165 chromed	
7	Seat	PTFE	
8	Bonnet (hexagonal)	Brass CW 617 N according to EN 12165 nickeled	
8	Bonnet	Brass CW 617 N according to EN 12165	
9	Stem	Brass CW 614 N according to EN 12165	
10	Handle cover	Plastic	-

BRASS BALL VALVE ACS PN40 REFERENCE +

MATERIALS FEMALE – FEMALE WITH DRAINER TYPES :

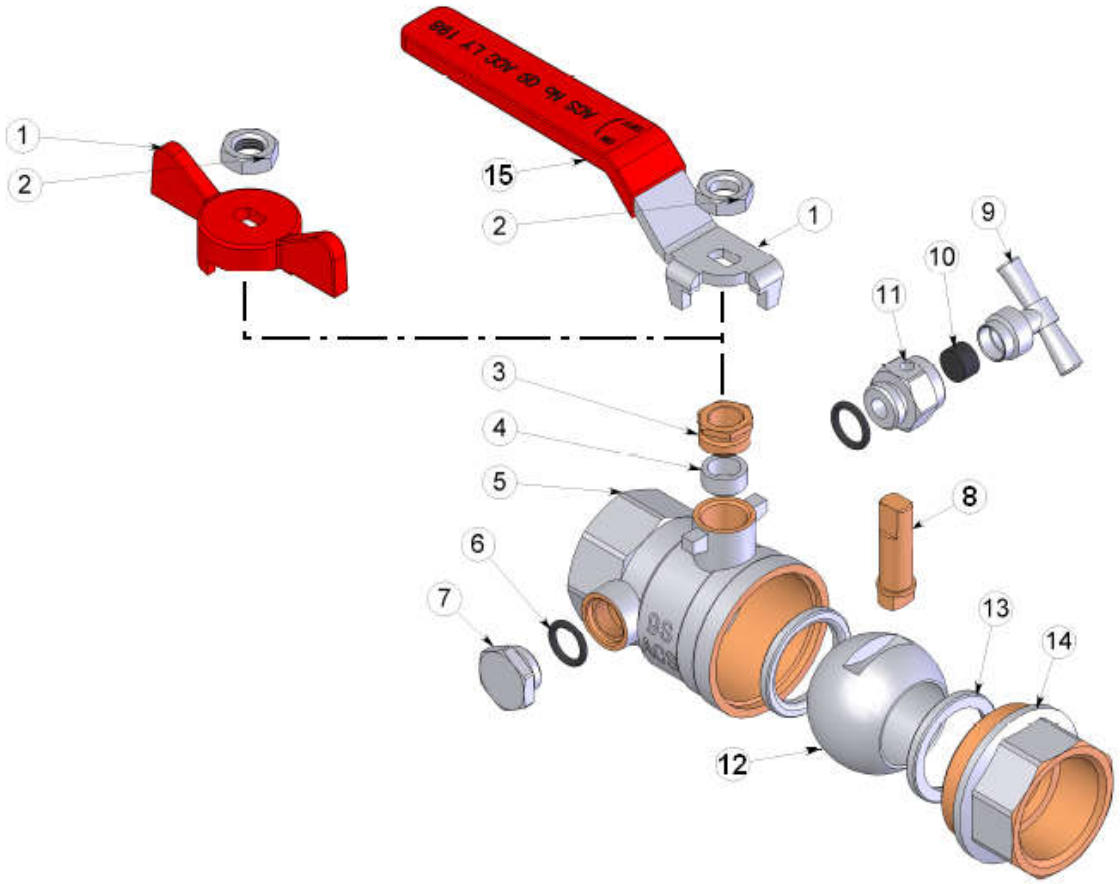

Item	Designation	Materials 510	Materials 530
1	Handle	Steel Q235	Aluminium
2	Handle nut	Steel Q235 Dacromet coated	
3	Packing nut	Brass CW 614 N according to EN 12165	
4	Packing	PTFE	
5	Body (external)	Brass CW 617 N according to EN 12165 nickeled	
5	Body (internal)	Brass CW 617 N according to EN 12165	
6	O ring	NBR	
7	Plug	Brass CW 617 N according to EN 12165 nickeled	
8	Stem	Brass CW 614 N according to EN 12165	
9	Screw	Brass CW 617 N according to EN 12165 nickeled	
10	Washer	NBR	
11	Manifold	Brass CW 617 N according to EN 12165 nickeled	
12	Ball	Brass CW 614 N according to EN 12165 chromed	
13	Seat	PTFE	
14	Bonnet (external)	Brass CW 617 N according to EN 12165 nickeled	
14	Bonnet (internal)	Brass CW 617 N according to EN 12165	
15	Handle cover	Plastic	-

BRASS BALL VALVE ACS PN40 REFERENCE +

FEMALE / FEMALE SIZE (in mm) :

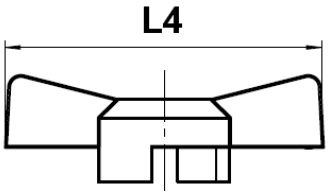

(525 type)

Stem size :

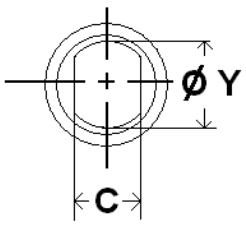

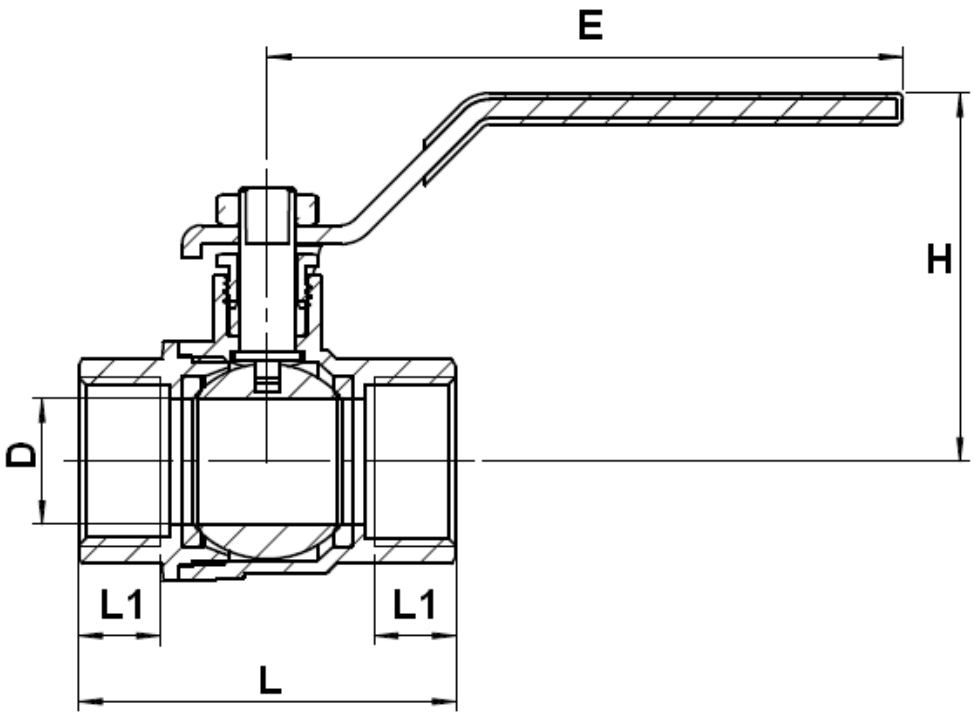

Ref.	DN	1/4"	3/8"	1/2"	3/4"	1"	1"1/4	1"1/2	2"	2"1/2	3“	4“
	Ø D	9.5	10	15	20	24.5	32	40	50	63	79	99
	L	45	45	53	60	70	84	94	105	136	160	189
	L1	10.5	10.5	11.5	13	14.5	16	17	17	23	26	30
501	L4	52	52	52	62	62						
509	E	80	80	90	101	116	122	140	140	240	240	240
525	H	42.3	42.3	46	58.5	62.5	72.5	78	98	124.5	135	149
	C	4.8	4.8	4.8	5.8	5.8	6.8	6.8	7.8	11.8	11.8	11.8
	Ø Y	6	6	8	9	9	9.8	9.8	9.8	13.5	13.5	13.5
525	Weight (Kg)	0.126	0.106	0.173	0.267	0.45						
501 / 509	Weight (Kg)	0.148	0.13	0.208	0.3	0.5	0.794	1.094	1.434	3.195	4.665	7.325

BRASS BALL VALVE ACS PN40 REFERENCE +

MALE / FEMALE SIZE (in mm) :

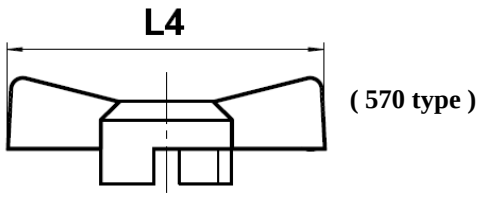

(570 type)

Stem size :

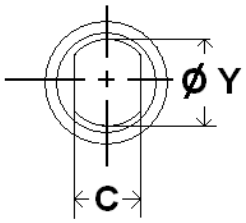

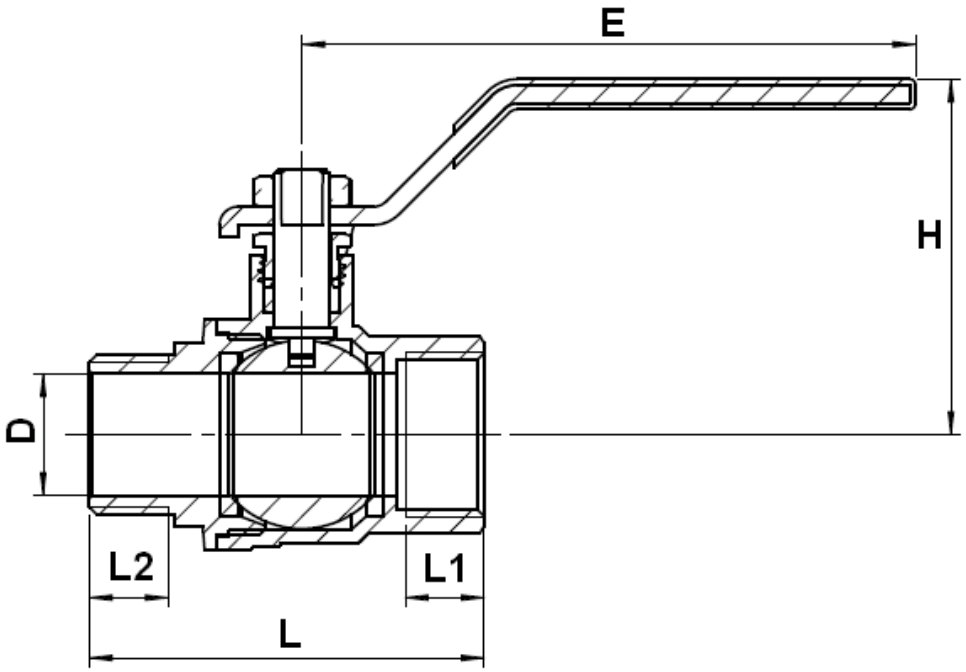

Ref.	DN	1/4"	3/8"	1/2"	3/4"	1"	1"1/4	1"1/2	2"
	Ø D	9.5	10	15	20	24.5	32	40	50
	L	49.5	49.5	58.5	65	76.5	89.5	104.5	116
	L1	10.5	10.5	11.5	13	14.5	16	17	17
	L2	9	9	10.5	12.5	14.5	14.5	15.5	17
517	L4	52	52	52	62	62			
570	E	80	80	90	101	116	122	140	140
571	H	42.3	42.3	46	58.5	62.5	72.5	78	98
	C	4.8	4.8	4.8	5.8	5.8	6.8	6.8	7.8
	Ø Y	6	6	8	9	9	9.8	9.8	9.8
570	Weight (Kg)	0.12	0.114	0.186	0.27	0.476			
517 / 571	Weight (Kg)	0.151	0.14	0.216	0.302	0.53	0.806	1.13	1.528

Sferaco 90 rue du Ruisseau 38297 St Quentin Fallavier Tel: + 33 (0) 474.94.15.90 Fax: + 33 (0) 474.95.62.08 Internet: www.sferaco.fr E-mail : sferaco@sferaco.fr

Information provided as an indication and subject to possible modification

BRASS BALL VALVE ACS PN40 REFERENCE +

MALE / MALE SIZE (in mm) :

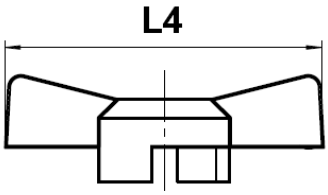

(565 type)

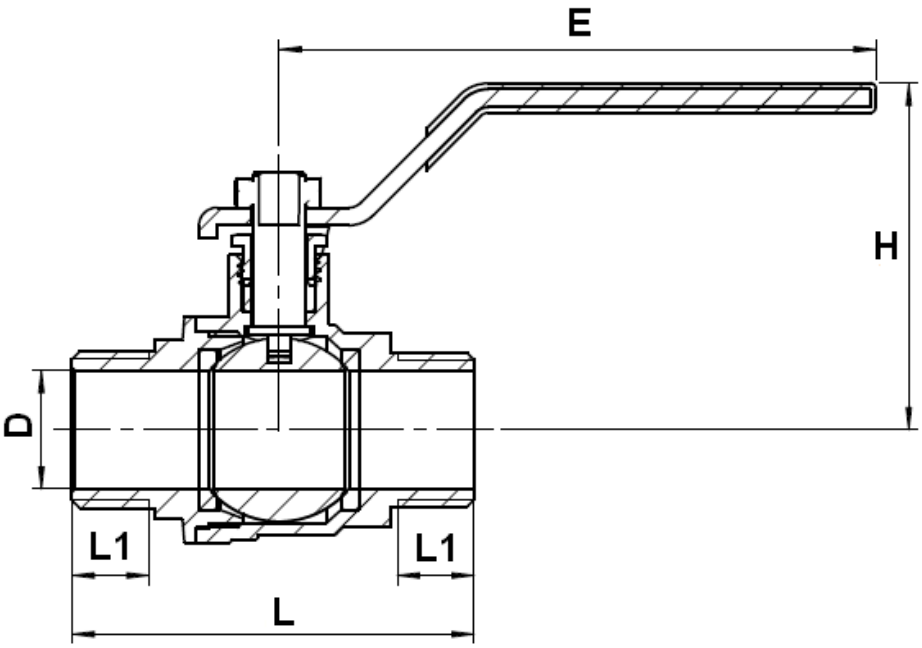

Stem size :

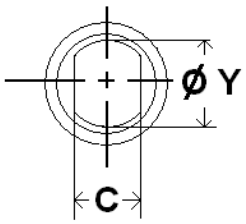

Ref.	DN	3/8"	1/2"	3/4"	1"	1"1/4	1"1/2	2"
	Ø D	10	15	20	24.5	32	40	50
	L	50.5	59	68	80	94.5	108	116.5
	L1	9	10.5	12.5	14.5	14.5	15.5	17
518	L4	52	52	62	62			
565	E	80	90	101	116	122	140	140
566	H	42.3	46	58.5	62.5	72.5	78	98
	C	4.8	4.8	5.8	5.8	6.8	6.8	7.8
	Ø Y	6	8	9	9	9.8	9.8	9.8
565	Weight (Kg)	0.12	0.181	0.266	0.43			
518 / 566	Weight (Kg)	0.146	0.21	0.302	0.49	0.826	1.07	1.548

Information provided as an indication and subject to possible modification

BRASS BALL VALVE ACS PN40 REFERENCE +

FEMALE / FEMALE WITH DRAINER SIZE (in mm) :

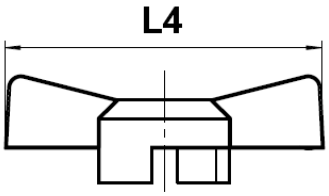

(530 type)

Stem size :

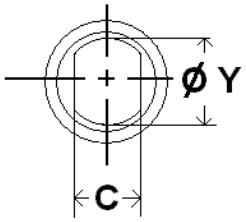

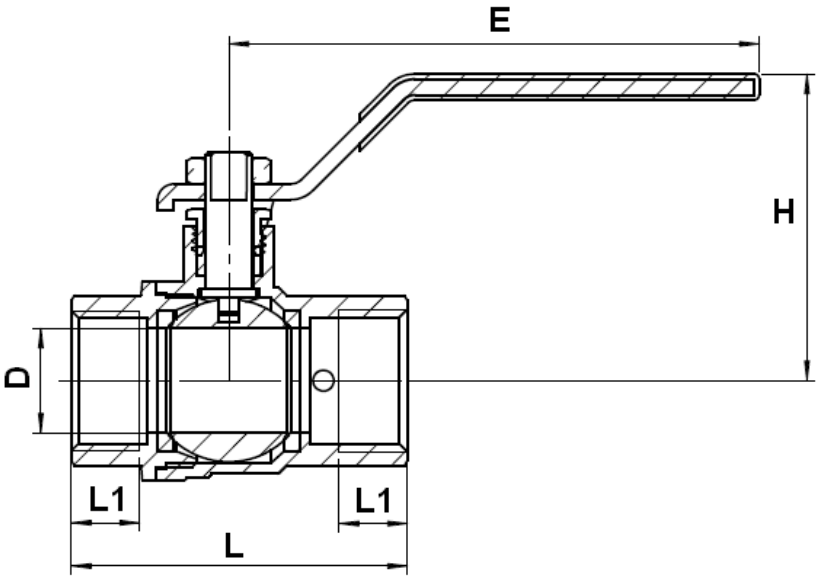

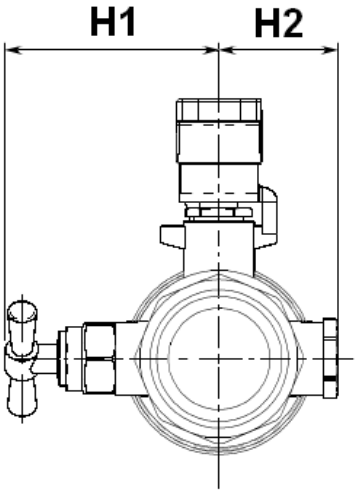

Ref.	DN	1/2"	3/4"	1"	1"1/4	1"1/2	2"
510	Ø D	15	20	24.5	32	40	50
	L	58.5	64	76	88.5	99.5	110.5
	L1	11.5	13	14.5	16	17	17
	E	90	101	116	122	140	140
	H	46	58.5	62.5	72.5	78	98
	H1	45.5	48.8	51.5	56.5	60.5	67.5
	H2	22.5	25.8	28.5	33.5	37.5	44.5
530	C	4.8	5.8	5.8	6.8	6.8	7.8
	Ø Y	8	9	9	9.8	9.8	9.8
510	Weight (Kg)	0.278	0.362	0.54	0.75	1.13	1.59
530	Weight (Kg)	0.244	0.336	0.485			

BRASS BALL VALVE ACS PN40 REFERENCE +

STANDARDS :

- Fabrication according to ISO 9001 :2008
- DIRECTIVE 97/23/CE : Products excluded from (Article 1, § 3.2)
- French water agreement **A.C.S. N° 14 ACC LY 469**
- Threaded female and male BSP cylindrical ends according to ISO 228-1

ADVICE : Our opinion and our advice are not guaranteed and SFERACO shall not be liable for the consequences of damages.
The customer must check the right choice of the products with the real service conditions.

sferaco
VALVES & FITTINGS

REF. 509

BRASS BALL VALVE ACS PN40 REFERENCE +

INSTALLATION INSTRUCTIONS

GENERAL GUIDELINES :

- Ensure that the valves to be used are appropriate for the conditions of the installation (type of fluid,pressure and temperature).
- Be sure to have enough valves to be able to isolate the sections of piping as well as the appropriate equipment for maintenance and repair.
- Ensure that the valves to be installed are of correct strenght to be able to support the capacity of their usage.
- **Installation of all circuits should ensure that their function can be automatically tested on a regular basis (at least two times a year).**

INSTALLATION INSTRUCTIONS :

- **Before installing the valves,clean and remove any objects from the pipes** (in particular bits of sealing and metal) which could obstruct and block the valves.

- **Ensure that both connecting pipes either side of the valve (upstream and downstream) are aligned (if they're not,the valves may not work correctly).**

- **Make sure that the two sections of the pipe (upstream and downstream) match,the valve unit will not absorb any gaps.Any distortions in the pipes may affect the thightness of the connection,the working of the valve and can even cause a rupture.**To be sure,place the kit in position to ensure the assembling will work.

- Before starting the fitting,ensure that the threads and tapping are clean.

- **If sections of piping do not have their final support in place,they should be temporarily fixed.This is to avoid unnecessary strain on the valve.**

- The theoretical lenghts given by ISO/R7 for the tapping are typically longer than required,the lenght of the thread should be limited, and **check that the end of the tube does not press right up to the head of the thread.**

- For the sealing assembly valve piping, it is essential to use products that are compatible with the requirements of the French water agreement ACS : **plumbers hemp proscribed**.

- Position the pipe clips on both sides of the valve.
- If mounting on an air conditioning with PER tubing and hoses,it is necessary to support the tubes and hoses with the fixing to avoid strain on the valve.
- When screwing the valve,ensure that you only rotate on screwed side by the 6 ended side.Use an open ended spanner or an adjustable spanner and not a monkey wrench.
- **Never use a vice to tighten the fixings of the valve.**

- Do not over tighten the valve.Do not block with any extensions as it may cause a rupture or weakening of the casing**.**

- **In general,for all valves used in buildings and heating,do not tighten above a torque of 30 Nm.**

The advice and assembly instructions above do not conform to any guarantee.
The information is given in general.It states what must not and must be done.
It is provided to ensure the safety of the personnel and the reliability of the valves.
The instructions in bold must be followed.

Sferaco 90 rue du Ruisseau 38297 St Quentin Fallavier Tel: + 33 (0) 474.94.15.90 Fax: + 33 (0) 474.95.62.08 Internet: www.sferaco.fr E-mail : sferaco@sferaco.fr

Information provided as an indication and subject to possible modification