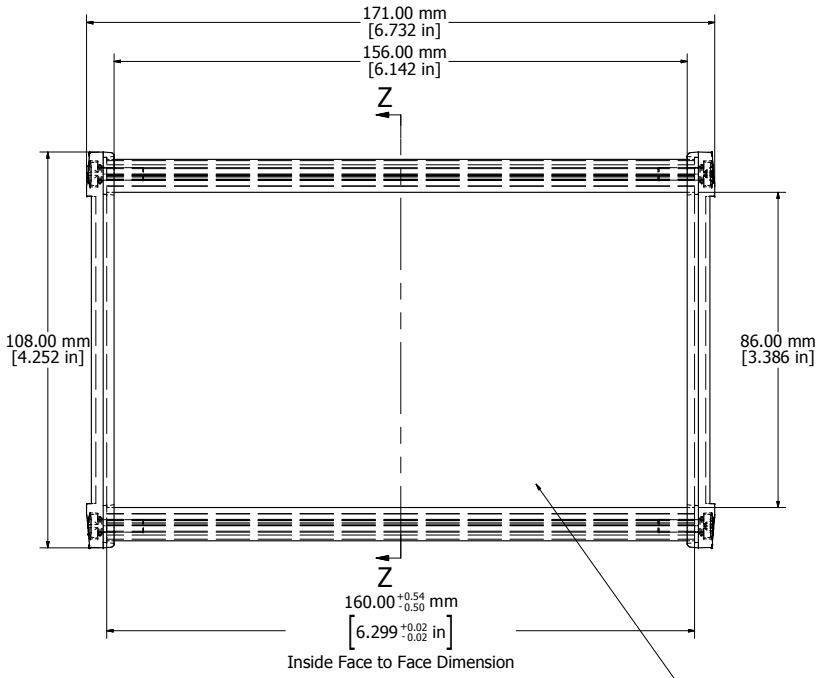

ASSEMBLY - VIEW FROM TOP

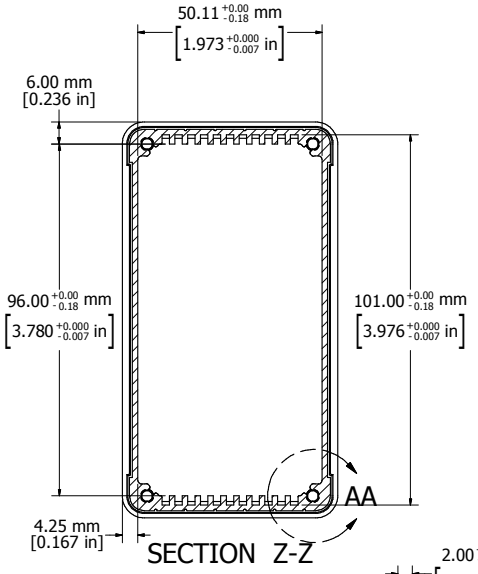

SECTION Z-Z

.75mm (.030") Deep Recess For Labels/Keypads etc.

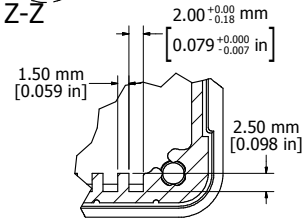

DETAIL AA



Fits 160mm (6.299") X 100mm (3.937") PCB
Note: Aluminum extrusion has a tolerance of +/- .02"

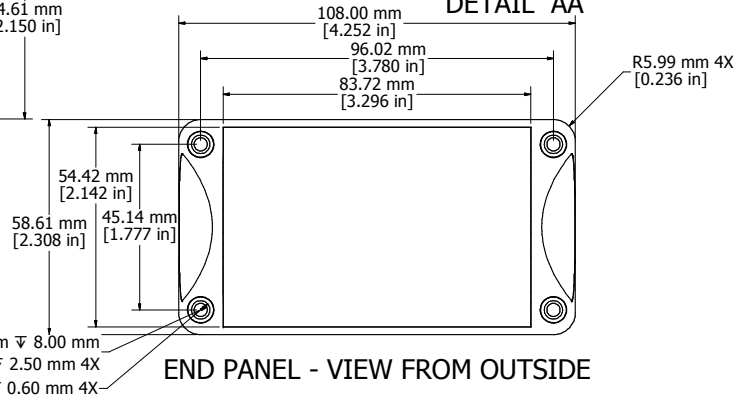

END PANEL - VIEW FROM OUTSIDE

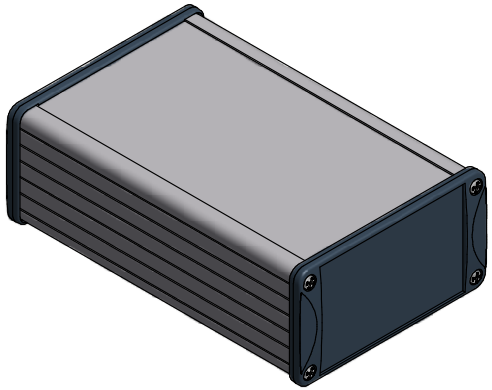

PROTECTION TO IP 65

Enclosures can be Factory Modified (Milling, Drilling, Printing etc.)
Contact Factory mjm@hammondmfg.com for quotes
Solid models of this enclosure available in STEP or IGES.

NOTE
Purchased assembly includes box, end panels, stainless steel #6 Taptight screws, self adhesive rubber feet, gaskets and O-Rings.
Box made from Extruded Aluminum 6063.
End panels made from Type 380 Diecast Aluminum with a black powder paint finish.

WATERPROOF 1457N1601

PART NUMBERS	
Clear anodized box with black powder painted end panels	1457N1601
Black powder painted box and end panels	1457N1601BK
EMI/RFI SHIELDED (IP 54)	
Clear anodized box with black powder painted end panels	1457N1601E
Black powder painted box and end panels	1457N1601EBK
ACCESSORIES	
See website for accessories.	

HAMMOND MANUFACTURING™

1457N1601

www.hammondmfg.com