E11983

Mounting adapter for Bosch Rexroth pneumatic cylinders

ADAPT FOR CYL BOSCH OCT

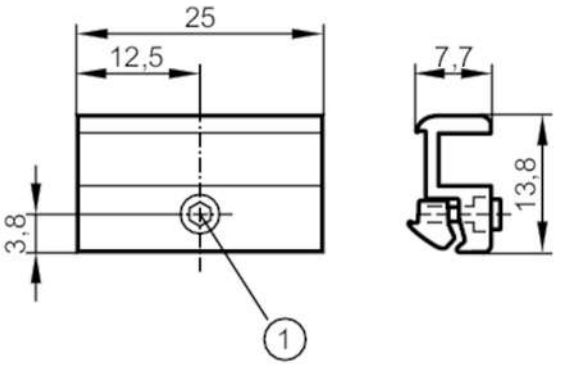

1 Mounting screw SW 1.5

Application		
Design		for types MKT
Mechanical data		
Weight	[g]	5.1
Type of mounting		for series: Bosch OCT
Materials		Adapter: aluminium; screw: stainless steel
Remarks		
Pack quantity		1 pcs.