

Model Number

NBB20-L2-A2-V1-M

Features

- **Sensor head bidirectional and rotatable**
- **20 mm flush**
- **E1-Type approval**
- **Extended temperature range -40 ... +85 °C**
- **4 LEDs indicator for 360° visibility**

Accessories

V1-G
Female connector, M12, 4-pin, field attachable

V1-W
Female connector, M12, 4-pin, field attachable

V1-G-2M-PUR
Female cordset, M12, 4-pin, PUR cable

V1-W-2M-PUR
Female cordset, M12, 4-pin, PUR cable

MHW 01
Modular mounting bracket

V1-M20-80
Receptacles, M12/M20; plastic version

Technical Data

General specifications		
Switching element function		PNP NO/NC
Rated operating distance	s_n	20 mm
Installation		flush
Output polarity		DC
Assured operating distance	s_a	0 ... 16.2 mm
Reduction factor r_{Al}		0.34
Reduction factor r_{Cu}		0.32
Reduction factor r_{304}		0.77
Reduction factor r_{St37}		1
Reduction factor r_{Brass}		0.43
Nominal ratings		
Operating voltage	U_B	10 ... 60 V DC
Switching frequency	f	0 ... 200 Hz
Hysteresis	H	typ. 5 %
Reverse polarity protection		reverse polarity protected
Short-circuit protection		pulsing
Voltage drop	U_d	≤ 2 V
Operating current	I_L	0 ... 200 mA
Off-state current	I_r	0 ... 0.5 mA
No-load supply current	I_0	≤ 20 mA
Operating voltage indicator		LED, green
Switching state indicator		LED, yellow
Functional safety related parameters		
$MTTF_d$		695 a
Mission Time (T_M)		20 a
Diagnostic Coverage (DC)		0 %
Ambient conditions		
Ambient temperature		-40 ... 85 °C (-40 ... 185 °F)
Mechanical specifications		
Connection type		Connector M12 x 1 , 4-pin
Housing material		PA-GF35
Sensing face		PA-GF35
Degree of protection		IP69K
Mass		130 g
Compliance with standards and directives		
Standard conformity		
Standards		EN 60947-5-2:2007 IEC 60947-5-2:2007
Approvals and certificates		
UL approval		cULus Listed, General Purpose
CSA approval		cCSAus Listed, General Purpose
CCC approval		Certified by China Compulsory Certification (CCC)
E1 Type approval		10R-04

Dimensions

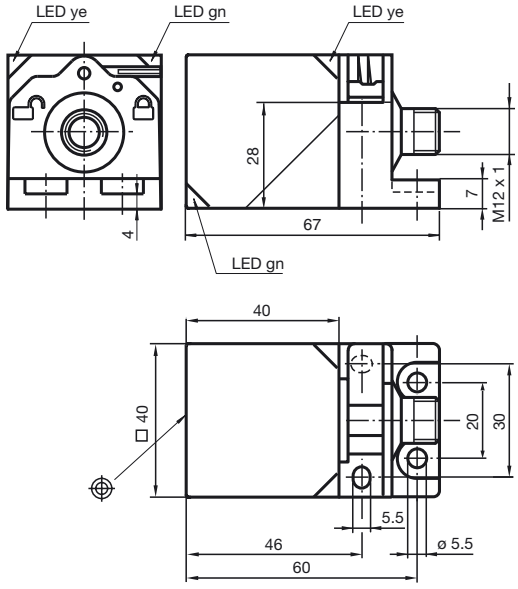

Electrical Connection

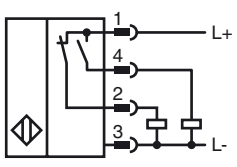

Release date: 2014-10-30 11:26 Date of issue: 2014-10-30 223317_eng.xml

Installation Hint

Emitted interference and interference immunity in accordance with motor vehicle directive 2006/28/EG (e1 Type approval)
Interference immunity in accordance with DIN ISO 11452-2: 100 V/m
Frequency band 20 MHz up to 2 GHz

Mains-borne interference in accordance with ISO 7637-2:

Pulse	1	2a	2b	3 a	3b	4	5
Severity level	III	III	III	III	III	III	IV
Failure criterion	C	A	C	A	A	A	C

EN 61000-4-2:	CD: 8 kV /	AD: 15 kV
Severity level	IV	IV
EN 61000-4-3:	30 V/m (80...2500 MHz)	
Severity level	IV	
EN 61000-4-4:	2 kV	
Severity level	III	
EN 61000-4-6:	10 V (0.01...80 MHz)	
Severity level	III	
EN 55011:	Class A	

Release date: 2014-10-30 11:26 Date of issue: 2014-10-30 223317_eng.xml

Refer to “General Notes Relating to Pepperl+Fuchs Product Information”.
Pepperl+Fuchs Group www.pepperl-fuchs.com
USA: +1 330 486 0001 fa-info@us.pepperl-fuchs.com
Germany: +49 621 776 4411 fa-info@de.pepperl-fuchs.com
Singapore: +65 6779 9091 fa-info@sg.pepperl-fuchs.com
PEPPERL+FUCHS SENSING YOUR NEEDS