DRAFT ANGLE OF APPROXIMATELY 1°

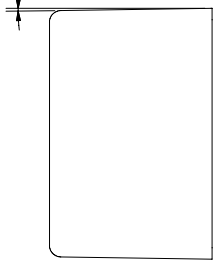

SIDE VIEW OF BOX

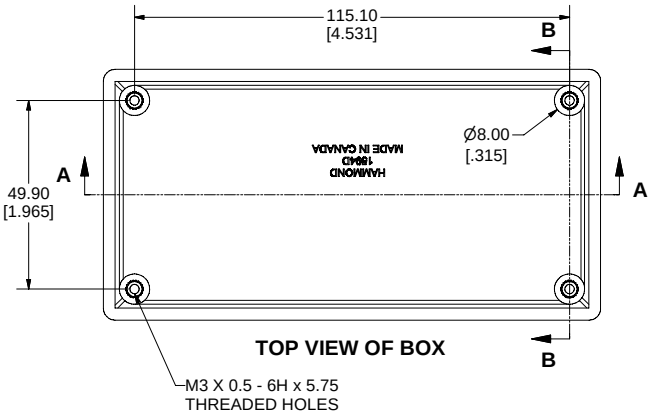

TOP VIEW OF BOX

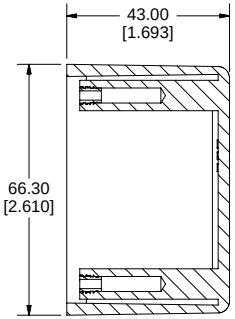

SECTION B-B
SCALE 1 : 1

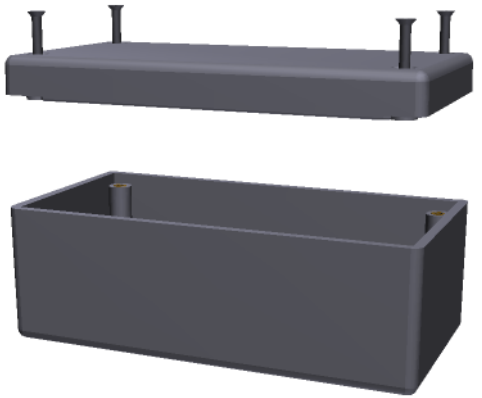

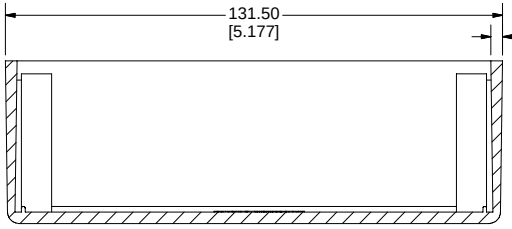

SECTION A-A
SCALE 1 : 1

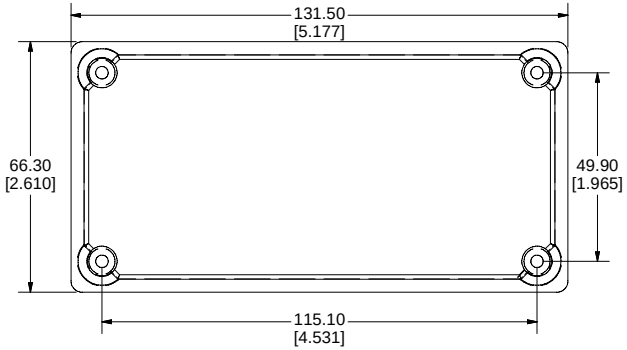

BOTTOM OF LID

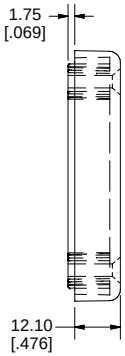

SIDE OF LID

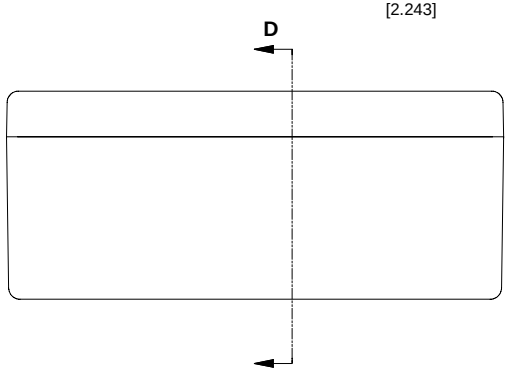

SIDE VIEW OF ASSEMBLY

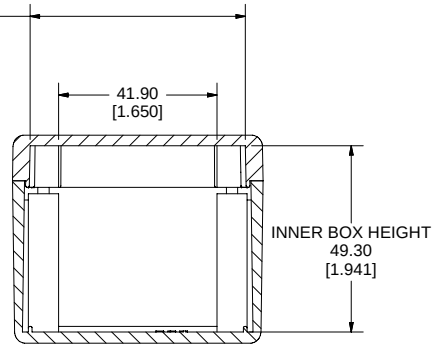

SECTION D-D
SCALE 1 : 1

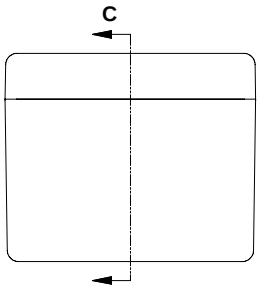

END VIEW OF ASSEMBLY

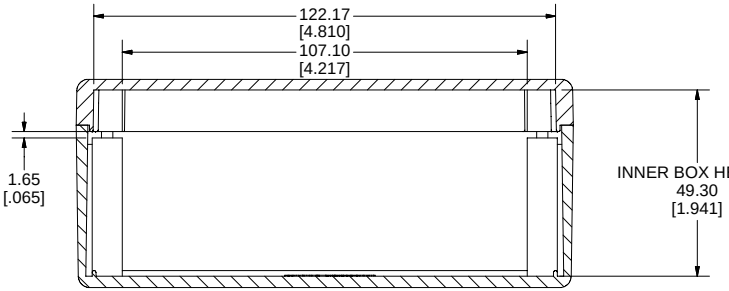

SECTION C-C
SCALE 1 : 1

1594D Enclosure	
FLAME RETARDANT ABS	
Black - RAL 9011	1594DBK
Grey - RAL 7018	1594DGY
NON-FLAME RETARDANT ABS	
Grey - RAL 7035	1594DSGY
Black - RAL 9011	1594DSBK
LIQUID RESISTANT	
Black - RAL 9011	1594DWBK
ACCESSORIES	
Cover Screws Non-Flame Retardant (pkg. 100) [#4 x 1" Self-Tapping]	1594TS100
Cover Screws Flame Retardant (pkg. 100) [M3 - 0.5 x 20mm]	1594MS100
Cover Screws Liquid Resistant (pkg. 100) [M3 - 0.5 x 20mm]	1594WMS100
Circuit Board Holders	(See 1594Z Series)

Enclosures can be Factory Modified (Milling, Drilling, Printing etc.)
Solid models of this enclosure available in STEP or IGES.
Contact Factory mjm@hammondmfg.com

HAMMOND MANUFACTURING™

1594D

www.hammondmfg.com