PQ7834

Pressure sensor for pneumatics

PQ-010-RHR18-QFPKG/AS/

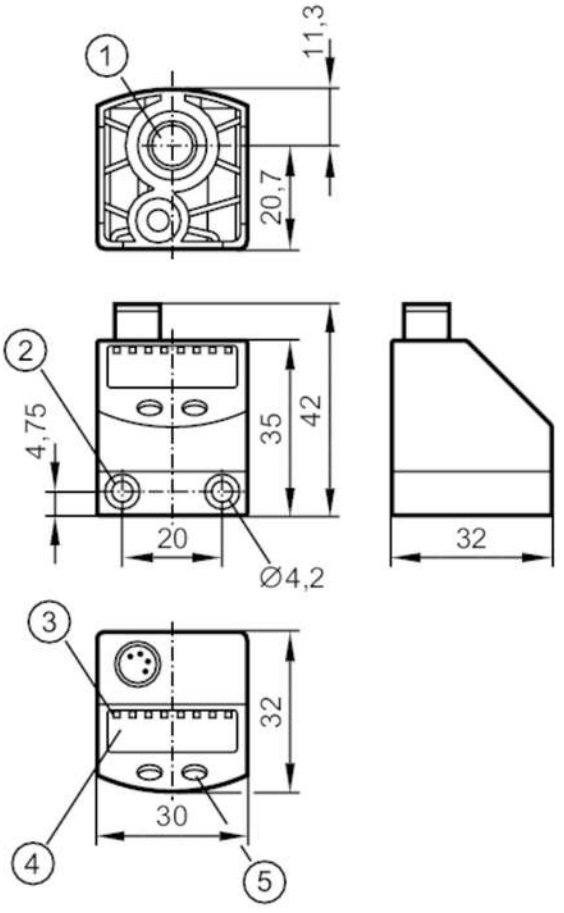

1 main pressure connection G 1/8 Tightening torque < 8 Nm insertion depth < 7.5 mm
2 Tightening torque < 0.5 Nm
3 LEDs Display unit / switching status
4 alphanumeric display 4-digit
5 programming button

Product characteristics				
Number of inputs and outputs	Number of digital outputs: 2			
Measuring range	-1...10 bar	-15...145 psi	-30...296 inHg	-100...1000 kPa
Process connection	threaded connection G 1/8 internal thread			
Application				
Special feature	Gold-plated contacts			
Application	for industrial applications			
Media	compressed air			
Conditionally suitable for	other media on request			
Medium temperature [°C]	0...60			
Min. bursting pressure	30 bar	435 psi	886 inHg	3000 kPa
Pressure rating	20 bar	290 psi	591 inHg	2000 kPa
Vacuum resistance [mbar]	-1000			
Type of pressure	relative pressure; vacuum			

PQ7834

Pressure sensor for pneumatics

PQ-010-RHR18-QFPKG/AS/

Electrical data					
Operating voltage	[V]	18...32 DC; (to SELV/PELV)			
Current consumption	[mA]	< 50			
Min. insulation resistance	[MΩ]	100; (500 V DC)			
Protection class		III			
Reverse polarity protection		yes			
Overvoltage protection		yes; (< 40 V)			
Power-on delay time	[s]	0.3			
Integrated watchdog		yes			
Inputs / outputs					
Number of inputs and outputs		Number of digital outputs: 2			
Outputs					
Total number of outputs		2			
Output signal		switching signal			
Electrical design		PNP			
Number of digital outputs		2			
Output function		normally open / normally closed; (parameterisable)			
Max. voltage drop switching output DC	[V]	2			
Permanent current rating of switching output DC	[mA]	100			
Switching frequency DC	[Hz]	< 200			
Short-circuit protection		yes			
Type of short-circuit protection		pulsed			
Measuring/setting range					
Measuring range		-1...10 bar	-15...145 psi	-30...296 inHg	-100...1000 kPa
Set point SP		-0.9...10 bar	-13...145 psi	-26...296 inHg	-90...1000 kPa
Reset point rP		-0.95...9.95 bar	-14...144 psi	-28...294 inHg	-95...995 kPa
In steps of		0.05 bar	1 psi	2 inHg	5 kPa
Accuracy / deviations					
Switch point accuracy	[% of the span]	< ± 0,5			
Repeatability	[% of the span]	< ± 0,1; (with temperature fluctuations < 10 K)			
Characteristics deviation	[% of the span]	< ± 0,25 (BFSL) / < ± 0,5 (LS); (BFSL = Best Fit Straight Line; LS = limit value setting)			
Hysteresis deviation	[% of the span]	< ± 0,25			
Long-term stability	[% of the span]	< ± 0,05; (per 6 months)			
Temperature coefficient zero point	[% of the span / 10 K]	0,2; (0...60 °C)			
Temperature coefficient span	[% of the span / 10 K]	0,2; (0...60 °C)			

PQ7834

Pressure sensor for pneumatics

PQ-010-RHR18-QFPKG/AS/

Response times			
Response time	[ms]	< 2.5	
Delay time programmable dS, dr	[s]	0; 0,002...5	
Software / programming			
Parameter setting options		hysteresis / window; normally open / normally closed; diagnostic function; switching logic; switch-on/switch-off delay; Damping; Display unit	
Operating conditions			
Ambient temperature	[°C]	0...70	
Storage temperature	[°C]	-25...85	
Protection		IP 65	
Tests / approvals			
EMC		EN 61000-4-2 ESD	4 kV CD / 8 kV AD
		EN 61000-4-3 HF radiated	10 V/m
		EN 61000-4-4 Burst	2 kV
		EN 61000-4-5 Surge	0,5/1 kV
		EN 61000-4-6 HF conducted	10 V
Shock resistance		DIN IEC 68-2-27	50 g (11 ms)
Vibration resistance		DIN IEC 68-2-6	20 g (10...2000 Hz)
MTTF	[years]	455	
Pressure Equipment Directive		Sound engineering practice; can be used for group 2 fluids; group 1 fluids on request	
Mechanical data			
Weight	[g]	84.5	
Materials		PBT; FKM; polyester	
Materials (wetted parts)		brass; FKM; silicon (coated); PBT	
Min. pressure cycles		50 million	
Process connection		threaded connection G 1/8 internal thread	
Displays / operating elements			
Display		Display unit	4 x LED, green
		switching status	2 x LED, yellow
		function display	alphanumeric display, 4-digit
		measured values	alphanumeric display, 4-digit
Display unit		bar; kPa; psi; inHg	
Accessories			
Accessories (optional)		mounting set for DIN rail: TH 35-7,5 / EN60715, E37340	
		Thread extension: 1/8", E30075	
		push-in air fitting for tube: Ø 6 mm, E30076	
		push-in air fitting for tube: Ø 8 mm, E30077	
Remarks			
Pack quantity		1 pcs.	

PQ7834

Pressure sensor for pneumatics

PQ-010-RHR18-QFPKG/AS/

Electrical connection

Connector: 1 x M8; coding: A; Contacts: gold-plated



Connection

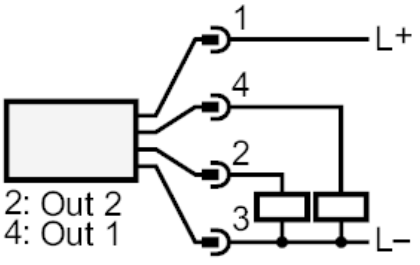

OUT1	switching output
OUT2	switching output
	Diagnostic output