E11043

Wirable socket

SDOAL070PLSFKPG

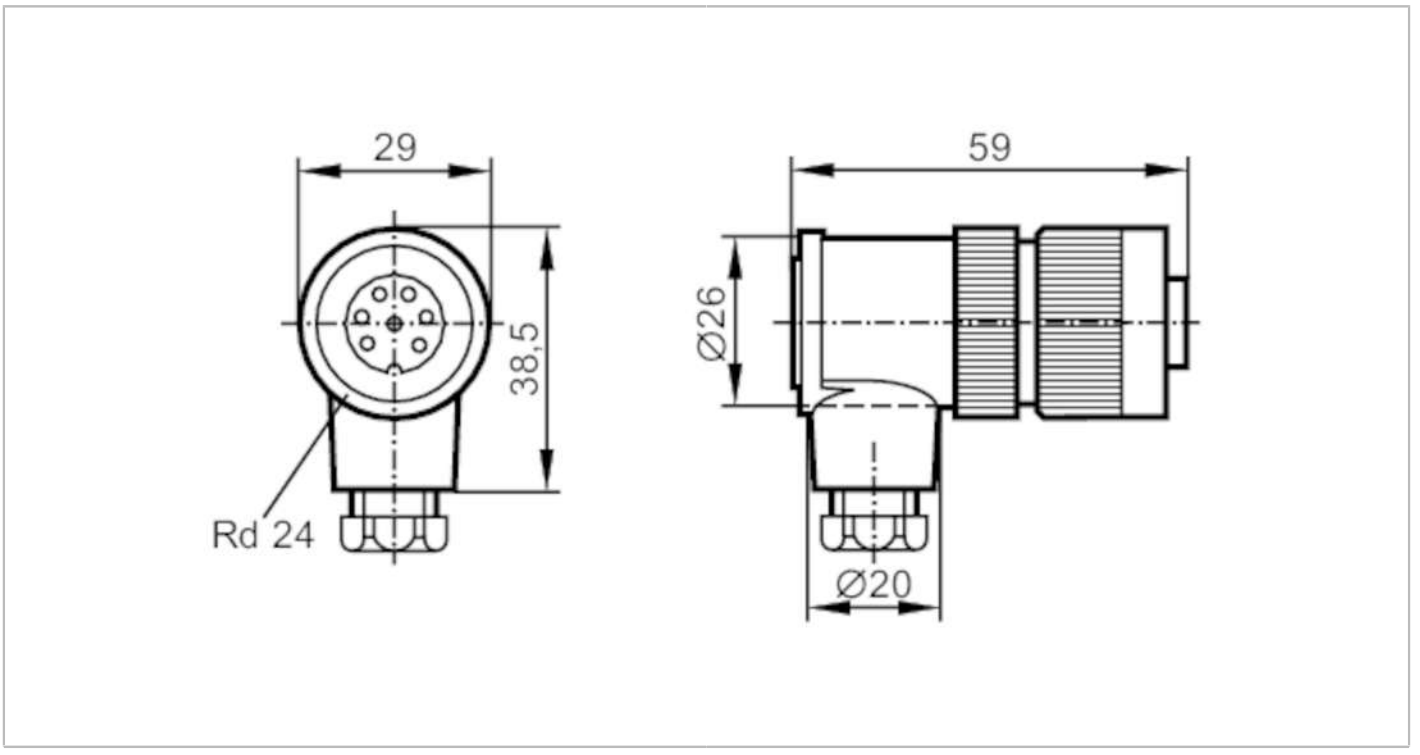

Application		
Special feature		Gold-plated contacts
Electrical data		
Operating voltage	[V]	< 250 AC / < 300 DC
Operating conditions		
Ambient temperature	[°C]	-40...100
Protection		IP 67
Mechanical data		
Weight	[g]	43.7
Dimensions	[mm]	59 x 29 x 38.5
Materials		PBT
Moulded-body material		PBT
Material nut		PA
Remarks		
Pack quantity		1 pcs.

E11043

Wirable socket

SDOAL070PLSFKPG

Electrical connection

terminals: ...2.5 mm²; Cable sheath: Ø 6...8 mm

Electrical connection - socket

Connector: 1 x Rd24, angled; coding: A; Moulded body: PBT; Locking: PA; Contacts: gold-plated



Connection

