Motor Starter Circuit Diagrams

One of these circuit diagrams will apply to this Motor Starter; please note that hatched areas represent the installation of, and final control circuit connections to, the Overload Relay which is available separately. The dotted box around Q1 represents when the starter is fitted with an Incoming Supply Isolator (XDP4... for example). When the Incoming Supply Isolator (Q1) is omitted the Incoming Supply Cables are connected directly onto Q11 terminals 1, 3, 5, E & N (when applicable to Ph-N control).

Applicable to:

XDP4 / 5.5 / 7.5 / 11 & XD11

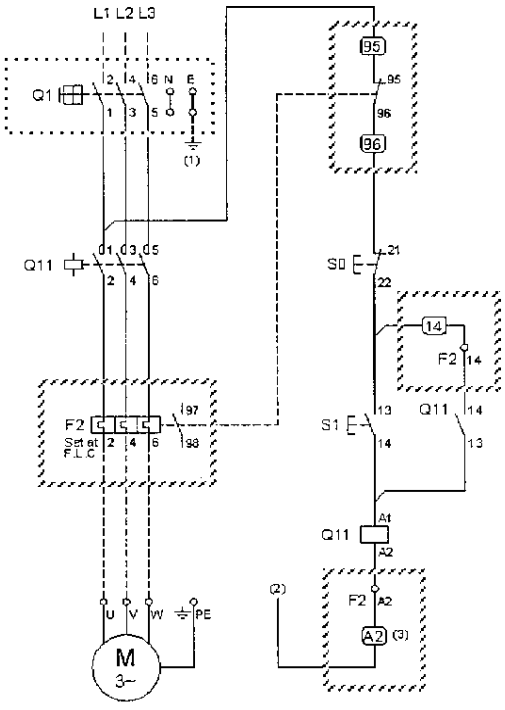

Applicable to:

XDR(P)4 / 5.5 / 7.5

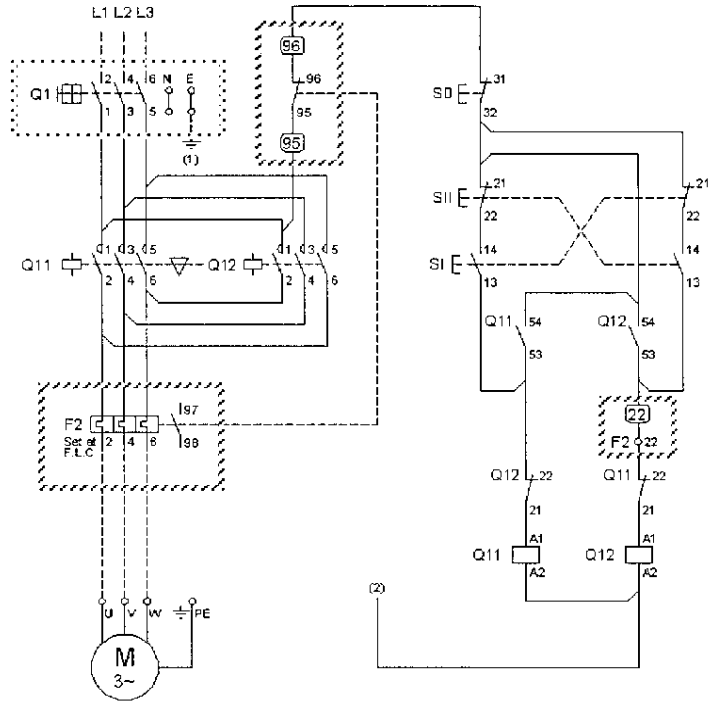

Applicable to:

XSD(P)5.5 / 7.5 / 11 / 15

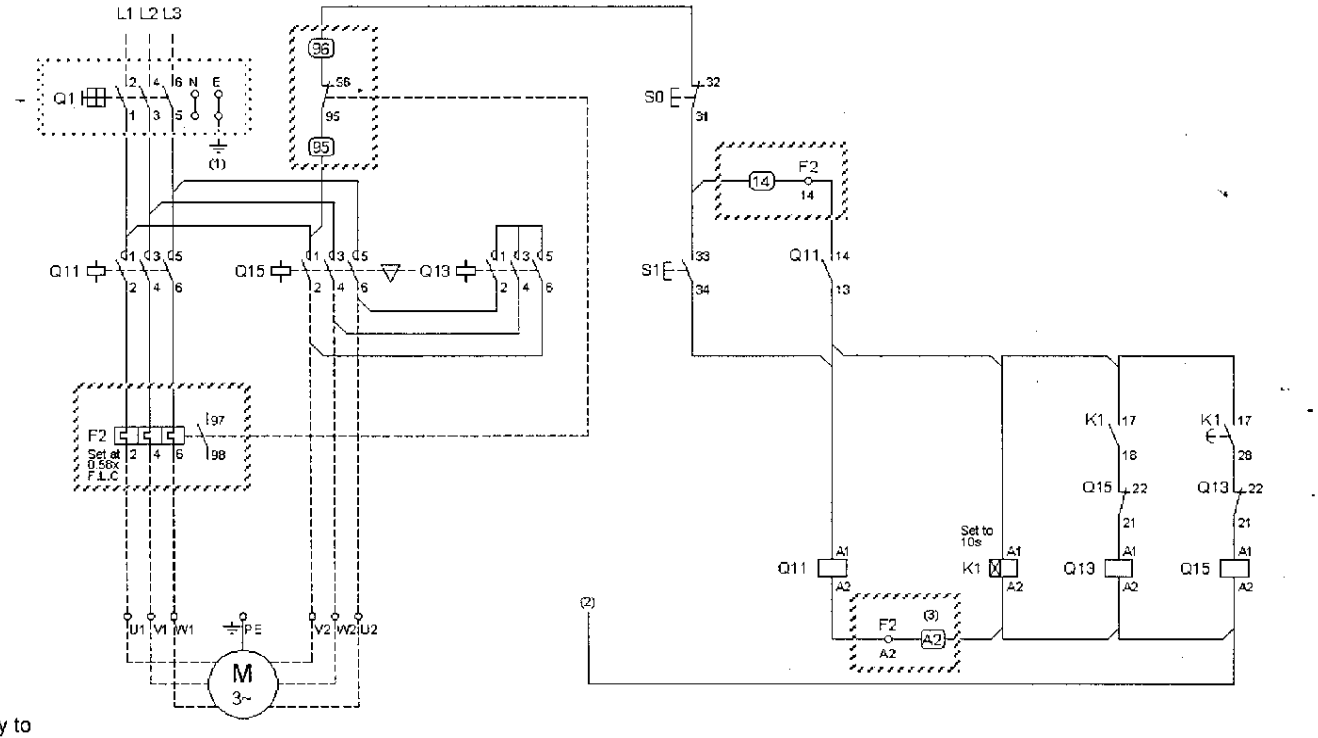

Key to

(1) Earth stud is bonded on metal enclosures only.
(2) Factory connection to 'N' on Q1 for 230V Ph-N control supply (X...P... types), N Terminal on X... types without Main Isolator. For 400V Ph–Ph control supply, '5' on Q11 for XD... types, '5' on Q12 for XDR... types and '5' on Q15 for XSD... types.
(3) Factory cable tail for terminal 'A2' on Overload Relay F2 is only applicable to ZB12 type Overload Relays.