EXP1012T

EXPANSION MODULE EXP SERIES FOR FLUSH-MOUNT PRODUCTS, RS485 INTERFACE, TROPICALIZED



Product designation			Expansion modules for flush-mount products - communication port
Product type designation			EXP1012T
General characteristics			
Description			Opto-isolated RS485 interface
Functions			Communication ports
Compatibility with LOVATO Electric product			
	IP		
		PMVF3000	Yes
	Digital multimeters		
		DMG600/601/611	Yes
	Digital power analyzers		
		DMG7000	Yes
		DMG7500	Yes
		DMG8000	Yes
		DMG9000	Yes
	Automatic power factor controllers		
		DCRL3/5	Yes
		DCRG8	Yes
	Automatic transfer switch contrllers		
		ATL610	Yes
		ATL800/900	Yes
	Fire pump controllers		
		FFL800	Yes
		FFLRA400	Yes
	Engine and generator controllers		
		RGK610	Yes
		RGK750/RGK8/RGK9	Yes
Communications			
Type of communication port			Serial
Interface			
RS485 communication			Yes
Mechanical features			
Weight		g	50
Dimensions			

The characteristics described in this document are subject to updates or modifications at any time. The descriptions, technical and functional information, illustrations and instructions in this brochure are purely illustrative, and are consequently not contractually binding

EXP1012T

EXPANSION MODULE EXP SERIES FOR FLUSH-MOUNT PRODUCTS, RS485 INTERFACE, TROPICALIZED

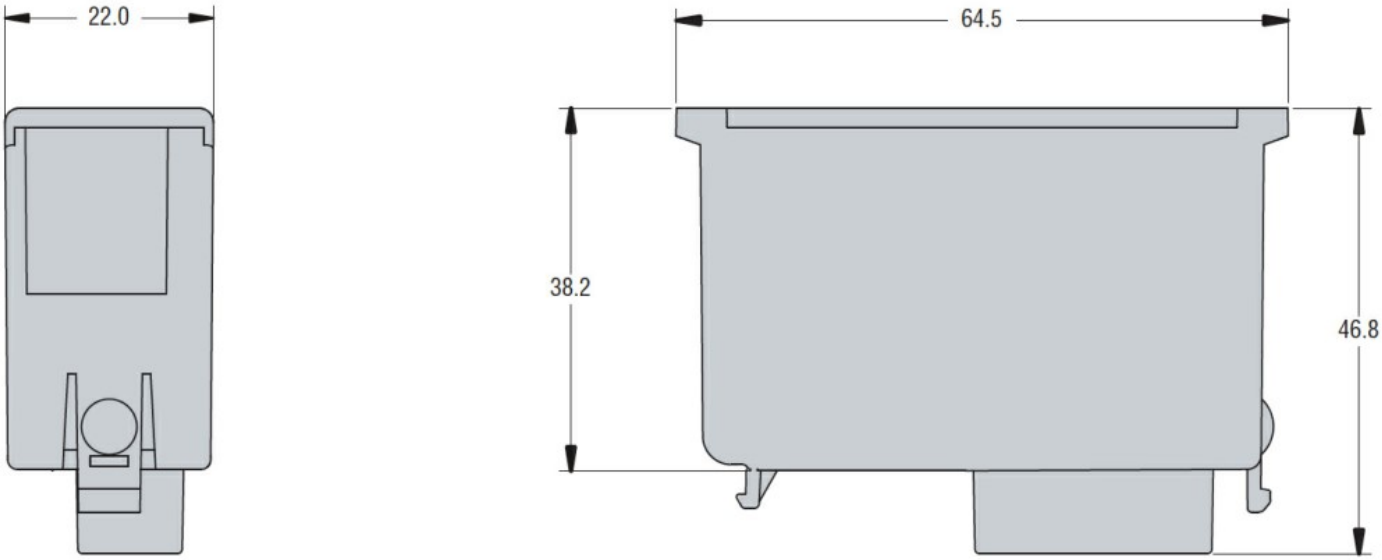

Wiring diagrams

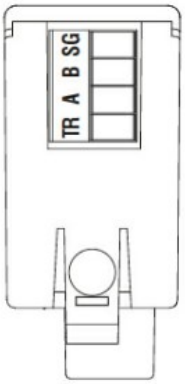

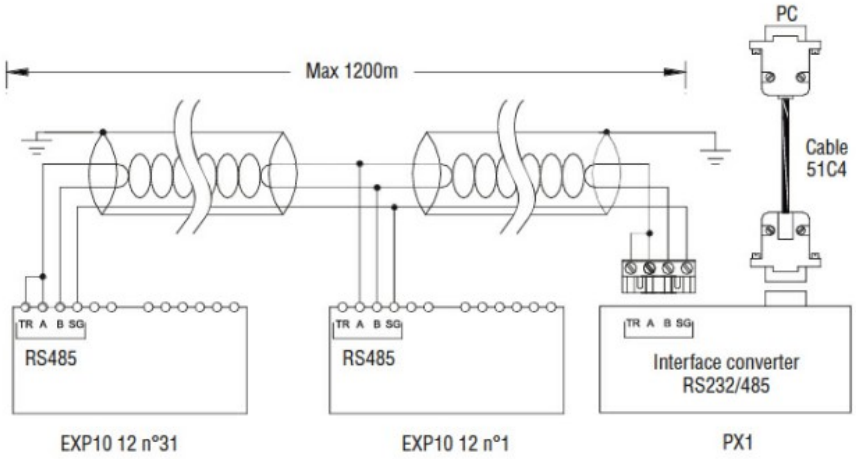

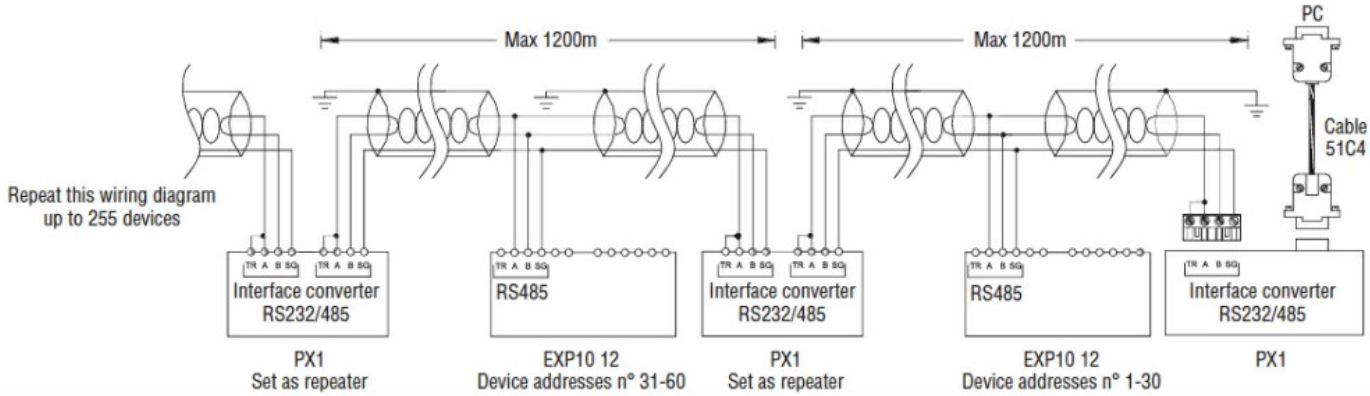

Certifications and compliance

Compliance

CSA C22.2 n° 14
IEC/EN 61000-6-2
IEC/EN 61000-6-3
IEC/EN 61010-1
UL508

The characteristics described in this document are subject to updates or modifications at any time. The descriptions, technical and functional information, illustrations and instructions in this brochure are purely illustrative, and are consequently not contractually binding

Certificates

	cULus
	EAC

ETIM classification

ETIM 8.0	EC002498 - Accessories/spare parts for low-voltage switch technology

The characteristics described in this document are subject to updates or modifications at any time. The descriptions, technical and functional information, illustrations and instructions in this brochure are purely illustrative, and are consequently not contractually binding