E21118

Mounting set for photoelectric sensors

O4 MOUNTING BRACKET ROD

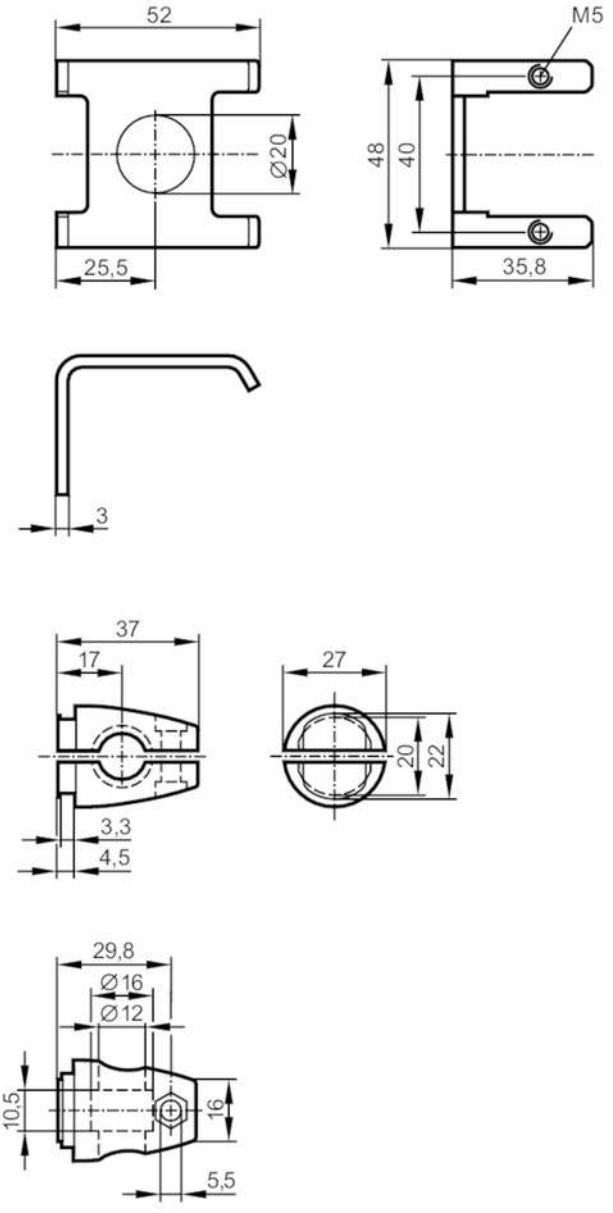

Application		
Design		clamp mounting
Mechanical data		
Weight	[g]	246.5
Materials		stainless steel (1.4404 / 316L); Clamp: diecast zinc
Accessories		
Items supplied		head cap screw: 1 x M10 x 120
		Nuts: 2 x M10
		cylinder screws: 2 x M5 x 10
		nut: 1 x M5
		head cap screw: 1 x M5 x 16

E21118

Mounting set for photoelectric sensors

O4 MOUNTING BRACKET ROD

Remarks	
Pack quantity	1 pcs.