# IG5941

## Inductive sensor

IGK3008-BPKG/US-104

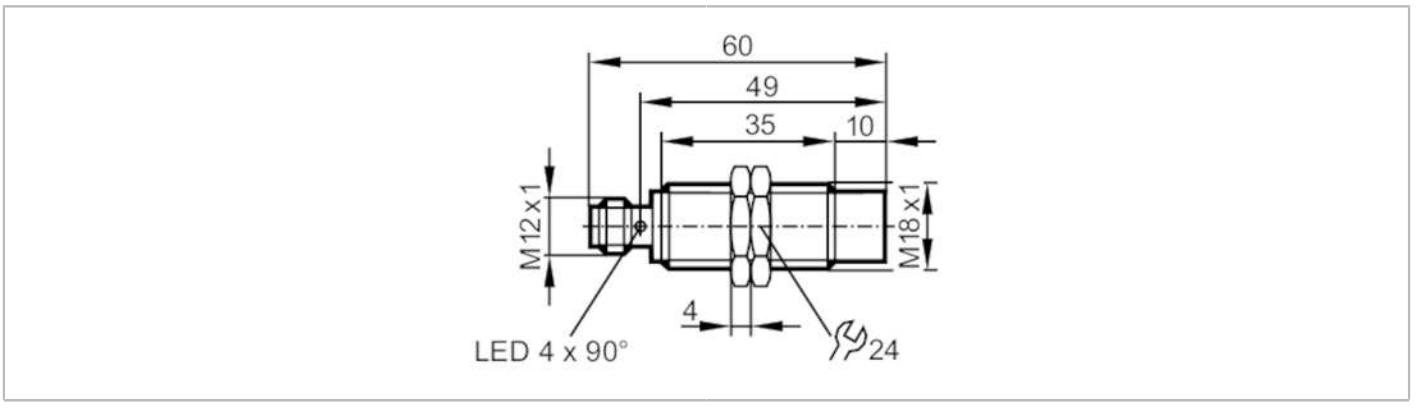


| | | |
|---|---|---|
| **Product characteristics** | | |
| Electrical design | | PNP |
| Output function | | normally open |
| Sensing range | [mm] | 8 |
| Housing | | threaded type |
| Dimensions | [mm] | M18 x 1 / L = 60 |
| **Application** | | |
| Special feature | | Gold-plated contacts |
| **Electrical data** | | |
| Operating voltage | [V] | 10...30 DC |
| Current consumption | [mA] | < 10 |
| Protection class | | II |
| Reverse polarity protection | | yes |
| **Outputs** | | |
| Electrical design | | PNP |
| Output function | | normally open |
| Max. voltage drop switching output DC | [V] | 2.5 |
| Permanent current rating of switching output DC | [mA] | 200 |
| Switching frequency DC | [Hz] | 300 |
| Short-circuit protection | | yes |
| Overload protection | | yes |
| **Detection zone** | | |
| Sensing range | [mm] | 8 |
| Real sensing range Sr | [mm] | 8 ± 10 % |
| Operating distance | [mm] | 0...6.48 |
| **Accuracy / deviations** | | |
| Correction factor | | steel: 1 / stainless steel: 0.7 / brass: 0.5 / aluminium: 0.4 / copper: 0.3 |
| Hysteresis | [% of Sr] | 3...15 |
| Switch point drift | [% of Sr] | -10...10 |

# IG5941

## Inductive sensor

IGK3008-BPKG/US-104

| | | | |
|---|---|---|---|
| **Operating conditions** | | | |
| Ambient temperature | [°C] | -25...70 | |
| Protection | | IP 67 | |
| **Tests / approvals** | | | |
| EMC | | EN 60947-5-2 | |
| | | EN 55011 | class B |
| MTTF | [years] | 1853 | |
| Embedded software included | | yes | |
| **Mechanical data** | | | |
| Weight | [g] | 46 | |
| Housing | | threaded type | |
| Mounting | | non-flush mountable | |
| Dimensions | [mm] | M18 x 1 / L = 60 | |
| Thread designation | | M18 x 1 | |
| Materials | | brass white bronze coated; sensing face: PBT orange;<br>LED window: PEI; lock nuts: brass white bronze coated | |
| **Displays / operating elements** | | | |
| Display | | switching status | 4 x LED, yellow |
| **Accessories** | | | |
| Items supplied | | lock nuts: 2 | |
| **Remarks** | | | |
| Pack quantity | | 1 pcs. | |

**Electrical connection - plug**

Connector: 1 x M12; coding: A; Contacts: gold-plated




Connection

