# Product data sheet
## Characteristics

# XY2CE1A270EX
## e-stop rope pull switch XY2CE - RH side -2NC - booted pushbutton



## Main

| | |
|---|---|
| Range of product | Preventa XY2 |
| Product or component type | Latching emergency stop trip wire switch |
| Device short name | XY2CE |
| Local signalling | Without pilot light |
| Reset | By booted push-button |
| Contacts type and com-position | 2 NC |
| Trigger cable anchor point | RH side |

## Complementary

| | |
|---|---|
| Number of cables | 1 |
| Trigger cable maximum length | 70 m |
| Housing colour | Red RAL 3000 |
| Auxiliary contacts operation | Slow-break |
| Connections - terminals | Screw clamp terminal, clamping capacity: 1 x 0.5...2 x 1.5 mm² |
| Tightening torque | 0.8...1.2 N.m |
| Cable entry number | 1 plain hole (ISO M20) for cable gland<br>2 plain hole with blanking plug |
| Marking | II2 D-Ex tb IIIC T85°C Db IP65 |
| Safety level | Can reach PL = e with the appropriate monitoring system and correctly wired conforming to EN/ISO 13849-1<br>Can reach category 4 with the appropriate monitoring system and correctly wired conforming to EN/ISO 13849-1<br>Can reach SIL 3 conforming to EN/IEC 61508 |
| Safety reliability data | B10d = 300000 value given for a life time of 20 years limited by mechanical or contact wear |
| Mechanical durability | 60000 cycles |
| Distance between cable supports | 10 m |
| [Ie] rated operational current | 3 A at 240 V AC-15, A300 conforming to EN/IEC 60947-5-1 appendix A<br>0.27 A at 250 V DC-13, Q300 conforming to EN/IEC 60947-5-1 appendix A |
| [Ithe] conventional enclosed thermal current | 10 A |
| [Ui] rated insulation voltage | 400 V, degree of pollution 3 conforming to EN/IEC 60947-1<br>300 V conforming to UL 508<br>300 V conforming to CSA C22.2 No 14 |
| [Uimp] rated impulse withstand voltage | 4 kV |
| Positive opening | With, conforming to EN/IEC 60947-5-1 section 3 |
| Resistance across terminals | <= 25 MOhm conforming to EN/IEC 60255-7 category 3<br><= 25 MOhm conforming to NF C 93-050 method A |
| Short circuit protection | 10 A cartridge fuse type gG conforming to EN/IEC 60269 |
| Width | 195 mm |
| Depth | 105 mm |
| Height | 142 mm |

The information provided in this documentation contains general descriptions and/or technical characteristics of the performance of the products contained herein.
This documentation is not intended as a substitute for and is not to be used for determining suitability or reliability of these products for specific user applications.
It is the duty of any such user or integrator to perform the appropriate and complete risk analysis, evaluation and testing of the products with respect to the relevant specific application or use thereof.
Neither Schneider Electric Industries SAS nor any of its affiliates or subsidiaries shall be responsible or liable for misuse of the information contained herein.

## Environment

| | |
|---|---|
| Standards | ATEX D 94/9/CE<br>EN/IEC 60079-0<br>EN/IEC 60079-31 |
| Dust zone | Zone 21 - 22 |
| Product certifications | INERIS 04ATEX0015 |
| Protective treatment | TC |
| Ambient air temperature for operation | -20...60 °C |
| Ambient air temperature for storage | -40...70 °C |
| Vibration resistance | 10 gn (10...300 Hz) conforming to EN/IEC 60068-2-6 |
| Shock resistance | 50 gn for 11 ms conforming to EN/IEC 60068-2-27 |
| Class of protection against electric shock | Class I conforming to EN/IEC 61140<br>Class I conforming to NF C 20-030 |
| IP degree of protection | IP65 |

## Offer Sustainability

| | |
|---|---|
| Sustainable offer status | Green Premium product |
| RoHS (date code: YYWW) | Compliant - since 0931 - Schneider Electric declaration of conformity |
| REACh | Reference not containing SVHC above the threshold |
| Product environmental profile | Available Download Product Environmental |
| Product end of life instructions | Need no specific recycling operations |

## Dimensions

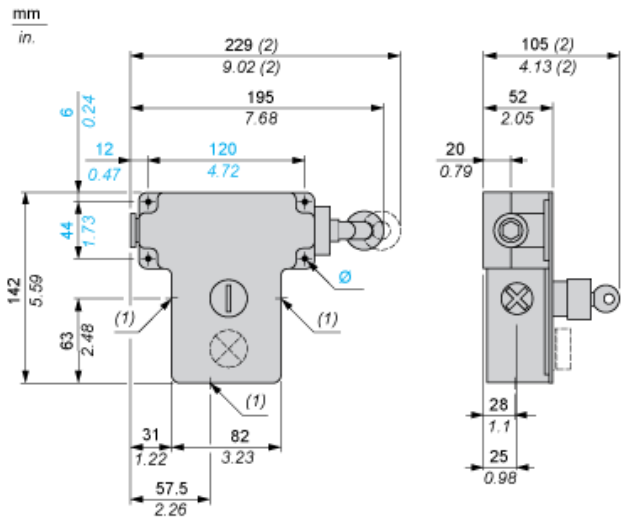


(1) 3 plain holes for n° 13 (Pg 13.5) cable gland
(2) Maximum extension.
Ø 4 elongated holes Ø 6 mm/0.24 in.

## Electrical Curves

### AC Supply 50/60 Hz Inductive Circuit

2-pole Contact Block

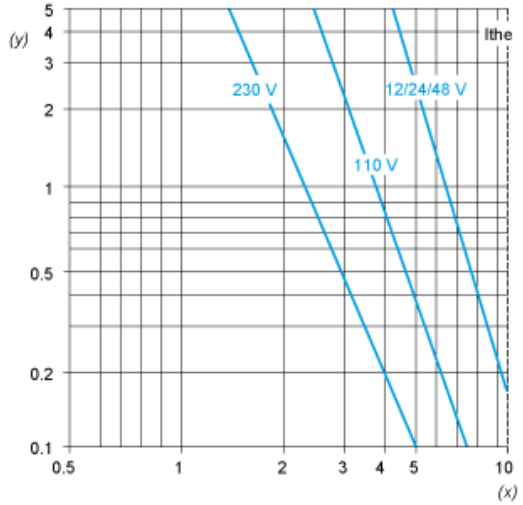


Y Millions of operating cycles
X Current in A

### DC Supply Power Broken in for 1 Million Operating Cycles Inductive Circuit

| | | | | |
|---|---|---|---|---|
| Voltage | V | 24 | 48 | 120 |
| ⎓ | W | 13 | 9 | 7 |