DATASHEET - NZM1/2-XV4



Extension shaft, for max. mounting depth = 400mm

Part no. NZM1/2-XV4
Catalog No. 261232

EL-Nummer (Norway) 0004358731

Delivery program

Product range		Accessories
Accessories		Extension shaft
Standard/Approval		UL/CSA, IEC
Construction size		NZM1/2
Description		Length 290 mm, can be cut to desired length
Equipment supplied		Extension shaft, 1 pc.
Function		400 mm max. mounting depth
For use with		NZM1(-4), PN1(-4), N(S)1(-4) NZM2(-4), PN2(-4), N(S)2(-4)

Design verification as per IEC/EN 61439

IEC/EN 61439 design verification		
10.2 Strength of materials and parts		
10.2.2 Corrosion resistance		Meets the product standard's requirements.
10.2.3.1 Verification of thermal stability of enclosures		Meets the product standard's requirements.
10.2.3.2 Verification of resistance of insulating materials to normal heat		Meets the product standard's requirements.
10.2.3.3 Verification of resistance of insulating materials to abnormal heat and fire due to internal electric effects		Meets the product standard's requirements.
10.2.4 Resistance to ultra-violet (UV) radiation		Meets the product standard's requirements.
10.2.5 Lifting		Does not apply, since the entire switchgear needs to be evaluated.
10.2.6 Mechanical impact		Does not apply, since the entire switchgear needs to be evaluated.
10.2.7 Inscriptions		Meets the product standard's requirements.
10.3 Degree of protection of ASSEMBLIES		Does not apply, since the entire switchgear needs to be evaluated.
10.4 Clearances and creepage distances		Meets the product standard's requirements.
10.5 Protection against electric shock		Does not apply, since the entire switchgear needs to be evaluated.
10.6 Incorporation of switching devices and components		Does not apply, since the entire switchgear needs to be evaluated.
10.7 Internal electrical circuits and connections		Is the panel builder's responsibility.
10.8 Connections for external conductors		Is the panel builder's responsibility.
10.9 Insulation properties		
10.9.2 Power-frequency electric strength		Is the panel builder's responsibility.
10.9.3 Impulse withstand voltage		Is the panel builder's responsibility.
10.9.4 Testing of enclosures made of insulating material		Is the panel builder's responsibility.
10.10 Temperature rise		The panel builder is responsible for the temperature rise calculation. Eaton will provide heat dissipation data for the devices.
10.11 Short-circuit rating		Is the panel builder's responsibility. The specifications for the switchgear must be observed.
10.12 Electromagnetic compatibility		Is the panel builder's responsibility. The specifications for the switchgear must be observed.
10.13 Mechanical function		The device meets the requirements, provided the information in the instruction leaflet (IL) is observed.

Technical data ETIM 7.0

Low-voltage industrial components (EG000017) / Switch operating shaft (EC000916)

Electric engineering, automation, process control engineering / Low-voltage switch technology / Circuit breaker (LV < 1 kV) / Switch axle (ecl@ss10.0.1-27-37-04-13 [AKF011013])

Length	mm	290
Cross section height	mm	8
Cross section width	mm	8

Approvals

North America Certification	UL/CSA certification not required

Dimensions

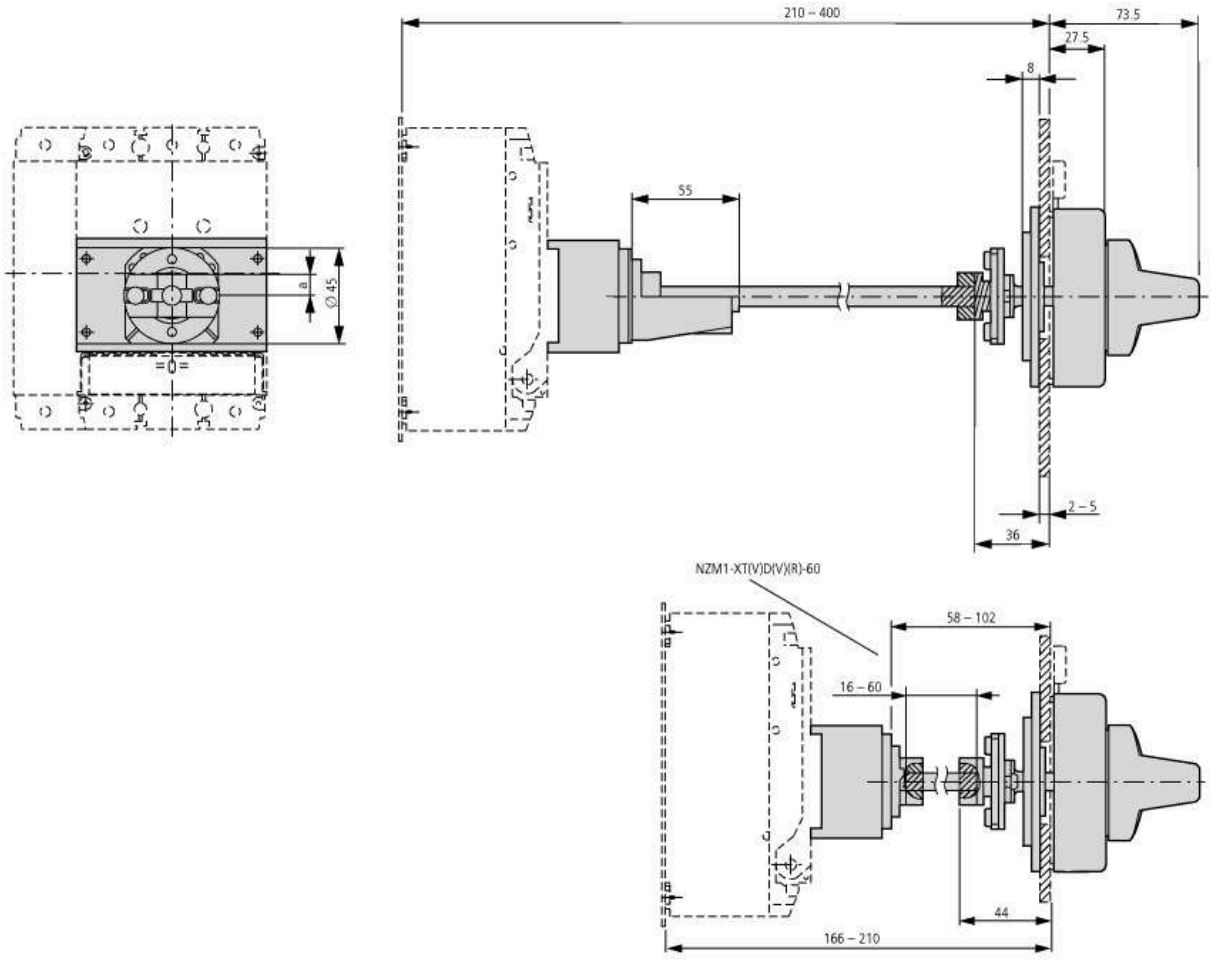

in connection with NZM1-XT(V)D(V)(R) door coupling rotary handle

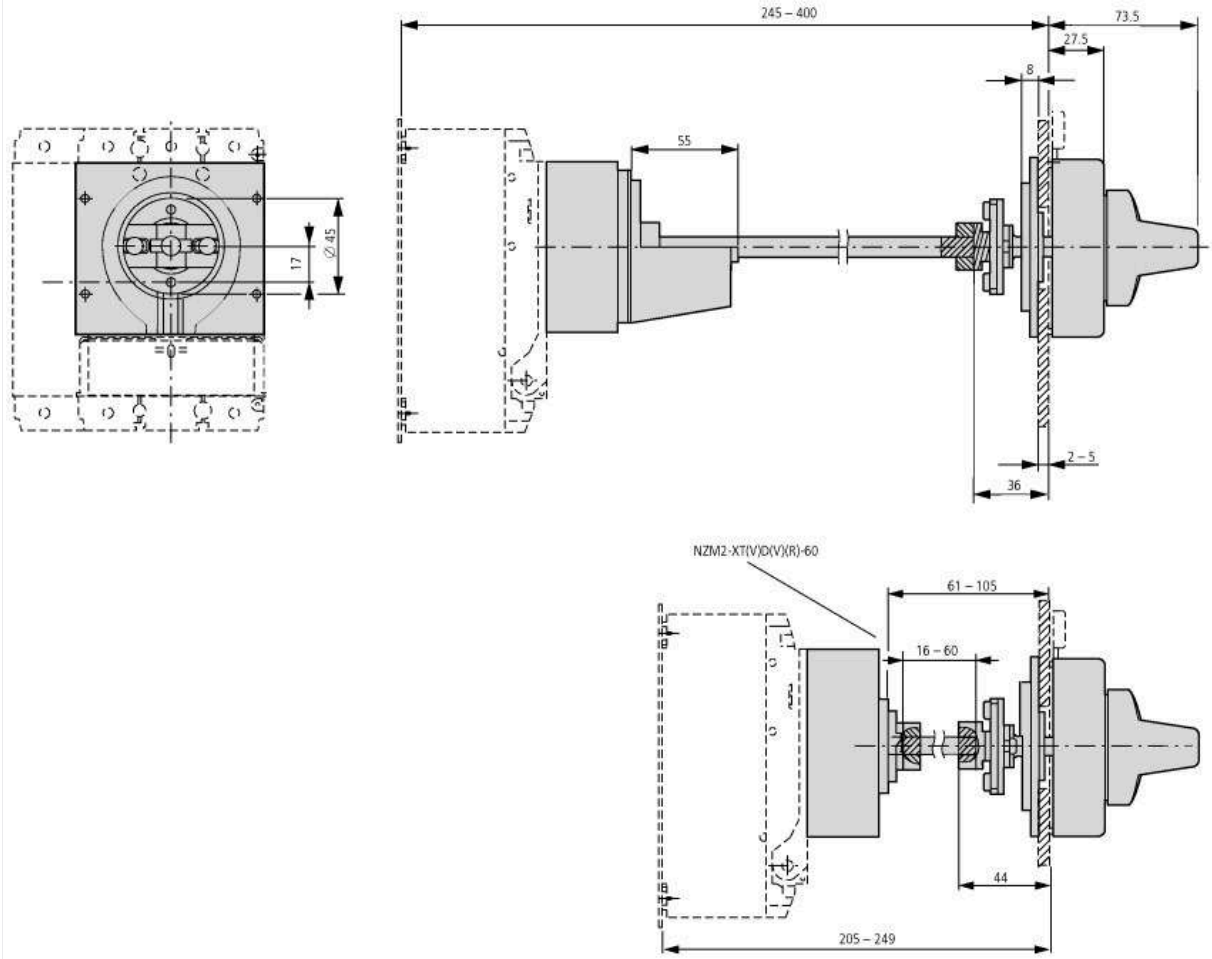

in connection with NZM2-XT(V)D(V)(R) door coupling rotary handle

© 02/2021 by Eaton Industries GmbH