DI602A

Compact evaluation unit for speed monitoring

DGA4012-WPKG/US/3D

Please do not use for new projects.

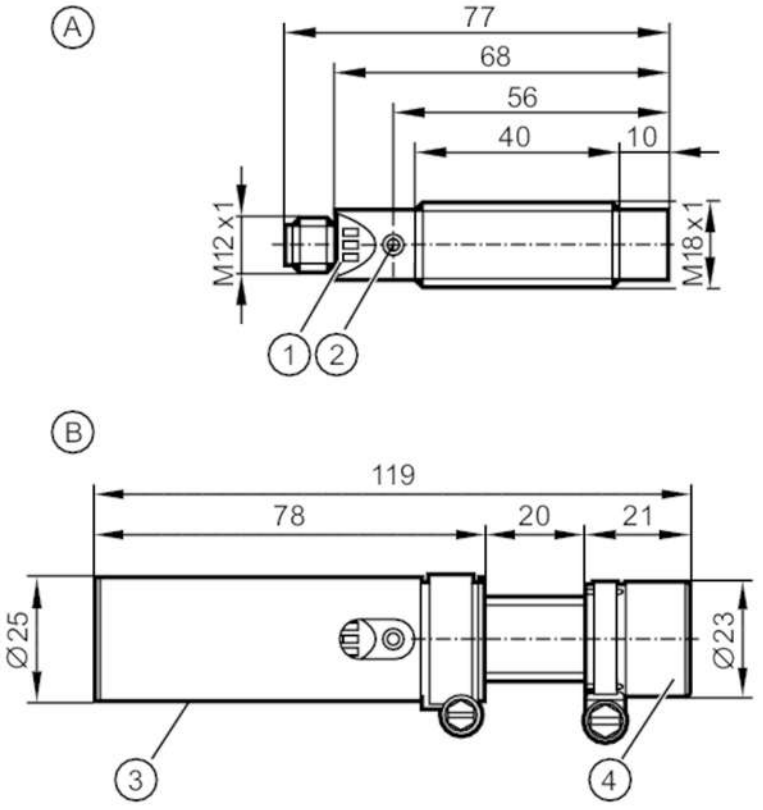

A sensor
B sensor with impact protection housing
1 LED 3 x
2 setting pushbutton
3 impact protection housing for the connector
4 impact protection housing for the sensor

Product characteristics		
Electrical design		PNP
Output function		normally open / normally closed; (parameterisable)
Sensing range	[mm]	8
Dimensions	[mm]	M18 x 1 / L = 68
Application		
Special feature		Gold-plated contacts
Application		evaluation of rotating and linear movements with regard to underspeed; blocking
Electrical data		
Nominal voltage DC	[V]	10...36
Current consumption	[mA]	< 15
Protection class		II
Reverse polarity protection		yes
Outputs		
Electrical design		PNP

DI602A

Compact evaluation unit for speed monitoring

DGA4012-WPKG/US/3D

Output function		normally open / normally closed; (parameterisable)
Max. voltage drop switching output DC	[V]	2.5
Permanent current rating of switching output DC	[mA]	150; (when used outside the hazardous area: 250; Pulse output: 15)
Short-circuit protection		yes
Type of short-circuit protection		pulsed
Overload protection		yes
Detection zone		
Sensing range	[mm]	8
Sensing range adjustable		no
Operating distance	[mm]	0...6
Measuring/setting range		
Setting range	[Imp/min]	3...6000
Measuring principle		inductive
Accuracy / deviations		
Correction factor		steel: 1 / stainless steel: 0.7 / brass: 0.5 / aluminium: 0.4 / copper: 0.3
Hysteresis	[% of Sr]	10
Response times		
Start-up delay	[s]	0...15
Max. damping frequency	[Imp/min]	18000
Software / programming		
Adjustment of the switch point		Teach function
Operating conditions		
Ambient temperature	[°C]	-20...50
Note on ambient temperature		when used outside the hazardous area: -20...60 °C
Storage temperature	[°C]	-25...60
Protection		IP 67
Tests / approvals		
ATEX marking		II 3D Ex tc IIIC T80°C Dc IP67 U
Note on ATEX marking		only in conjunction with the impact protection housing
EMC		EN 60947-5-2
MTTF	[years]	1051
Mechanical data		
Weight	[g]	177
Mounting		non-flush mountable
Dimensions	[mm]	M18 x 1 / L = 68
Thread designation		M18 x 1
Materials		stainless steel (316Ti/1.4571); PBT; TPE-U
Displays / operating elements		
Display	switching status	1 x LED, yellow
	operation	1 x LED, green
	input signal	1 x LED, green

DI602A

Compact evaluation unit for speed monitoring

DGA4012-WPKG/US/3D

Accessories

Items supplied	lock nuts: 2
	Impact protection housing
	Mounting clamps

Electrical connection - plug

Connector: 1 x M12; coding: A; Contacts: gold-plated



Connection

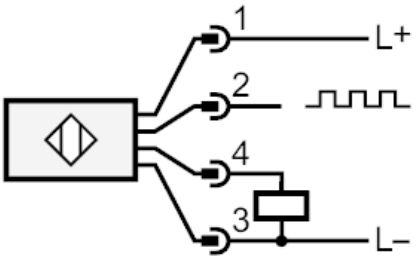

1: L+
2: Pulse output pulse sequence corresponds to damping frequency
3: L-
4: switching output adjustable