Actuator

Series for Safety switches SLC

Description **ACF-1**	Article number **3911742391**

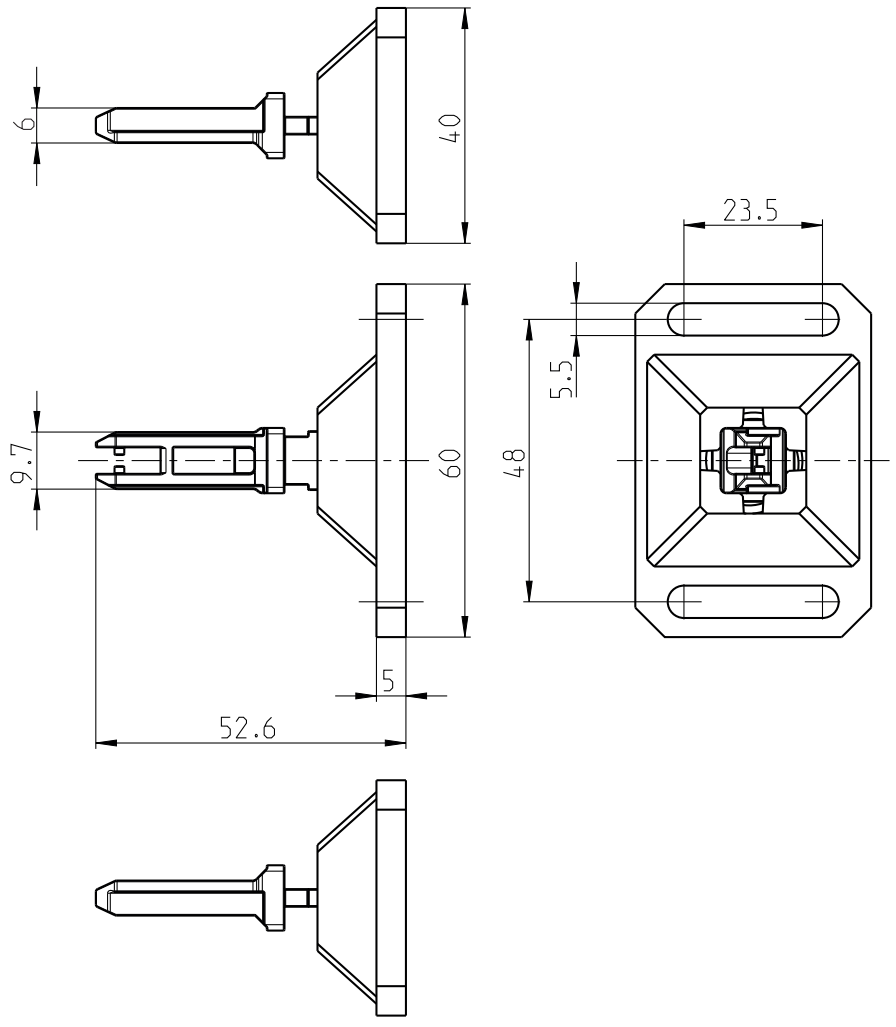

Mechanical data		
Actuator		Edelstahl (Niro)
Enclosure		GD-Zn
Minimum actuating radius	R_{min}	400 mm

Notes
The actuator can be aligned with the mask of the SLC head opening by pressing it in and turning it in 90° steps.

Technical modifications and errors excepted.
The technical datasheet corresponds to the technical state as of 2019-01-22 and will not be removed in case of changes.