THE INFORMATION CONTAINED IN THIS DRAWING IS THE SOLE PROPERTY OF L-COM, INC. ANY REPRODUCTIONS IN PART OR WHOLE WITHOUT THE WRITTEN PERMISSION OF L-COM, INC. IS PROHIBITED.

REVISIONS			
REV	DESCRIPTION	DATE	CHANGED BY
G	ECN 4564: ADDED ROHS, UPDATED DRAWING AND NEW FORMAT	03/03/2010	DFRISELLO
H	ECN 5937: ADDED NOTE FOR PANEL MOUNTING	01/24/2012	AD
J	CHANGE DIM FROM .623 TO .541 IN ZONE C6	04/12/2019	GUTTADAURO
K	ECN 10934: REVISED GENDER CHANGER TO SOCKET SAVER IN LABEL NOTE	01/21/2021	MBLACKWOOD

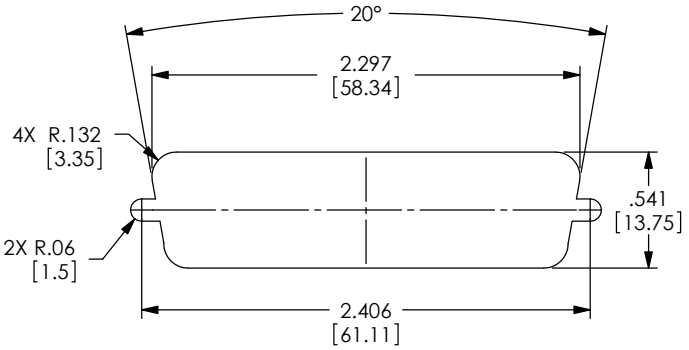

RECOMMENDED PANEL OPENING
(MAX PANEL THICKNESS: 0.06")

NOTE: DIFFERENT STANDOFFS AND JACK SCREWS ARE REQUIRED FOR PANEL MOUNTING. SEE WWW.L-COM.COM OR MASTER CATALOG FOR DETAILS.

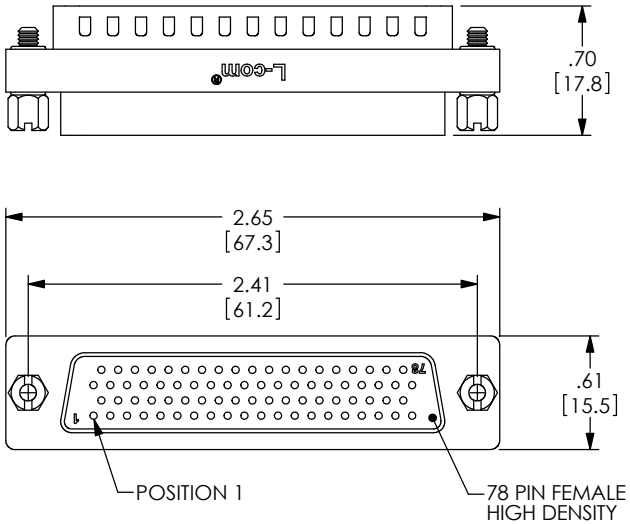

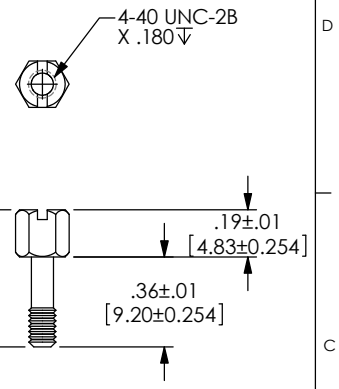

JACKSCREW
SPECIFICATION

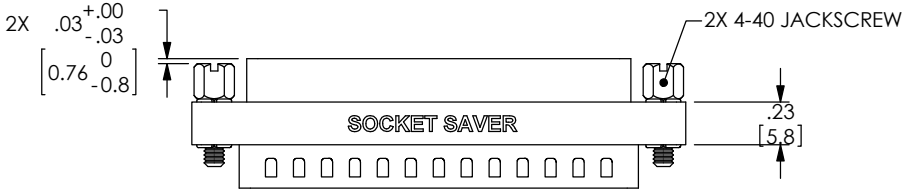

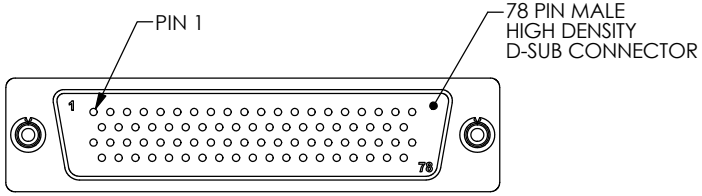

NOTES:

MATERIAL:
SHELL: STEEL
CONTACTS: COPPER ALLOY
HARDWARE: BRASS
INSULATOR: PBT FIBER REINFORCED (UL94V-0 RATED)

FINISH:
SHELL: TIN/NICKEL PLATED
CONTACTS: GOLD FLASH PLATED
HARDWARE: NICKEL PLATED

ELECTRICAL:
CURRENT RATING: 3 AMP

MISCELLANEOUS:
OPERATING TEMPERATURE RANGE: -55°C TO +105°C.
ALL CONTACTS ARE WIRED STRAIGHT THROUGH.
COMPONENT SHALL BE TESTED FOR CONTINUITY.

LABELING:
PANTONE 2945 BLUE. "L-COM" FONT MyriaMM REGULAR.
"SOCKET SAVER" FONT ARIAL BOLD, TEXT HEIGHTS; .085"
TEXT COLOR; WHITE.

PACKAGING:
COMPONENT SHALL BE INDIVIDUALLY PACKAGED IN ACCORDANCE WITH L-COM SPECIFICATION PS-0031.

UNLESS OTHERWISE SPECIFIED, DIMENSIONS ARE IN INCHES [mm]
OVERALL CABLE LENGTH TOLERANCE:
≤12 [305] = +1 [25] / -0
>12 [305] ≤60 [1524] = +2 [51] / -0
>60 [1524] ≤120 [3048] = +4 [102] / -0
>120 [3048] ≤300 [7620] = +6 [152] / -0
>300 [7620] = +5% / -0
ALL OTHER DIMENSIONAL TOLERANCES:
.X = ± .2 [5] FRACTIONS
.XX = ± .02 [.5] ± 1/32
.XXX = ± .005 [.13] ANGLES ± 1°
THIRD-ANGLE PROJECTION

APPROVALS	DATE
DRAWN BY D.PARHAM	03/01/2002
CHECKED BY T.CLARK	11/08/2001
APPROVED BY R.CARRICK	03/01/2002

CONFIGURATION DETAILS OF UNDIMENSIONED FEATURES MAY VARY
COLOR VARIATIONS MAY OCCUR

L-com an INFINITE brand
50 High Street, West Mill, North Andover, MA 01845 USA.
Phone: 1.800.341.5266
1.978.682.6936

CATEGORY: D-SUBMINIATURE

PRODUCT DESCRIPTION: ADPT, SKT SAVER HD78 SLIM M/F

SIZE	CAGE CODE	ITEM NO.	REV.
B	43321	DGBH78MF	K

SCALE: NONE | CAD FILE: DGBH78MF.SLDDRW | SHEET 1 OF 1

T-Rev.D