E10868

Connecting cable with socket

ADOGH030MSS0005E03

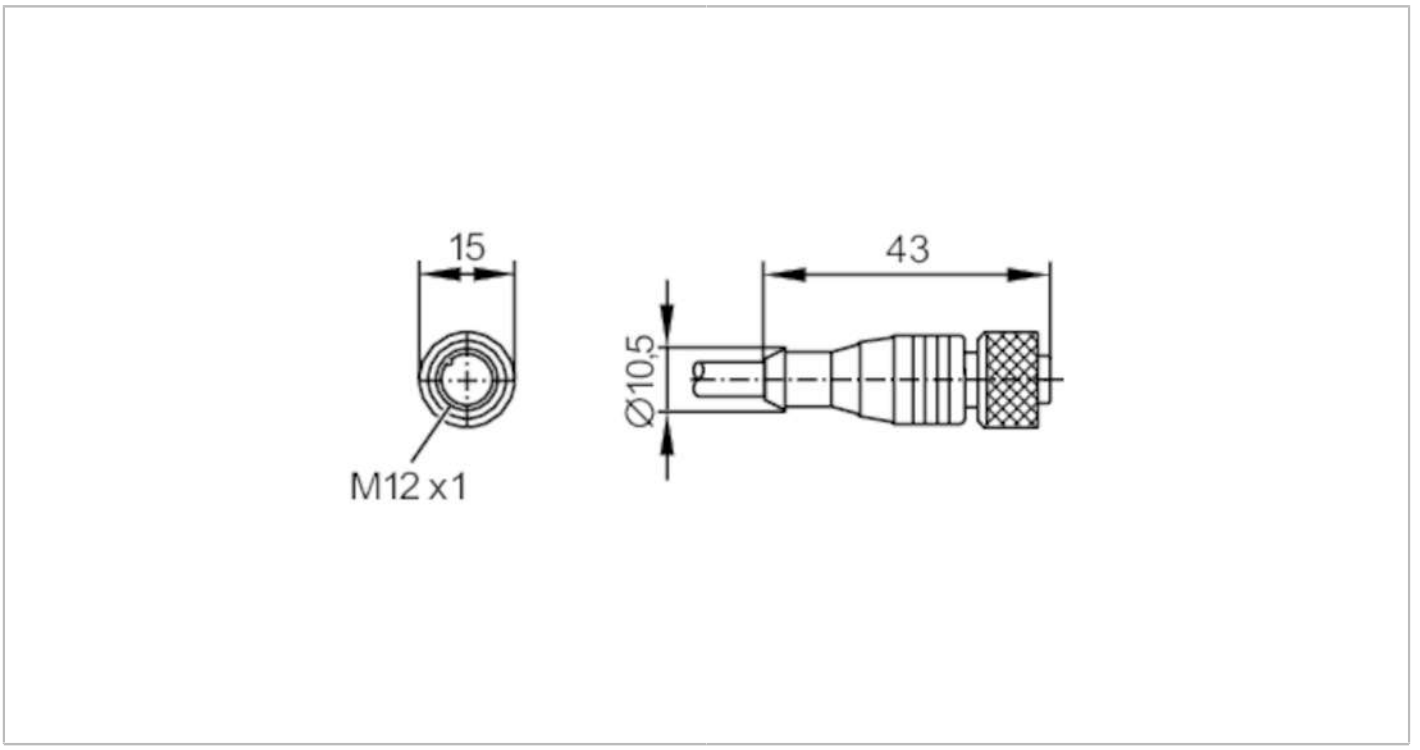

Electrical data		
Operating voltage	[V]	< 250 AC / < 300 DC
Operating conditions		
Ambient temperature	[°C]	-25...90
Protection		IP 67
Mechanical data		
Weight	[g]	198.3
Dimensions	[mm]	15 x 15 x 43
Materials		TPU
Moulded-body material		TPU
Material nut		brass, nickel-plated
Remarks		
Pack quantity		1 pcs.

E10868

Connecting cable with socket

ADOGH030MSS0005E03

Electrical connection

Cable: 5 m, PVC, orange, Ø 5 mm; 3 x 0.34 mm² (19 x Ø 0.16 mm) / AWG 22

Electrical connection - socket

Connector: 1 x M12, straight; coding: C; Moulded body: TPU; Locking: brass, nickel-plated; Tightening torque: 0.5 Nm

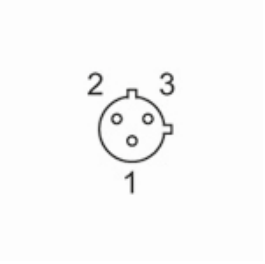

Connection

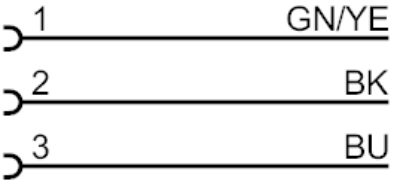

	Core colours :
BK =	black
BU =	blue
GN/YE =	green/yellow