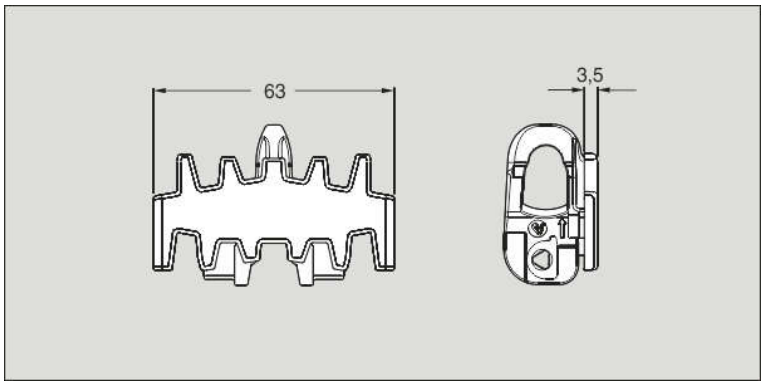

©2022 powered by CADENAS

XLTP 5A65

Name	Plain chain
Description	X65
Product Group(s)	X65
Configurable	No
Pack Size	1
Class	A
Weight	4.04
Unit	PCE
Length	5000
Catalogue	
Chain guide	
Spare parts	