Deep groove ball bearings 6305-2Z (Series 63..-2Z)

main dimensions to DIN 625-1, gap seals on both sides

The datasheet is only an overview of dimensions and basic load ratings of the selected product. Please always observe all the guidelines in these overview pages. Further information is given on many products under the menu item "Description". You can also order comprehensive information via the Catalogue selection system (http://www.fag.de/content.fag.de/en/mediathek/library/library.jsp) or by telephone on +49 (91 32) 82 - 28 97.

d	25	mm	
D	62	mm	
B	17	mm	
d_1	36,4	mm	
D_2	52,5	mm	
$D_{a\ max}$	55	mm	
$d_{a\ min}$	32	mm	
$r_{a\ max}$	1	mm	
r_{min}	1,1	mm	
m	0,24	kg	Mass
C_r	23900	N	Basic dynamic load rating, radial
C_{0r}	11700	N	Basic static load rating, radial
n_G	13400	1/min	Limiting speed
n_B	11600	1/min	Reference speed
C_{ur}	590	N	Fatigue limit load, radial

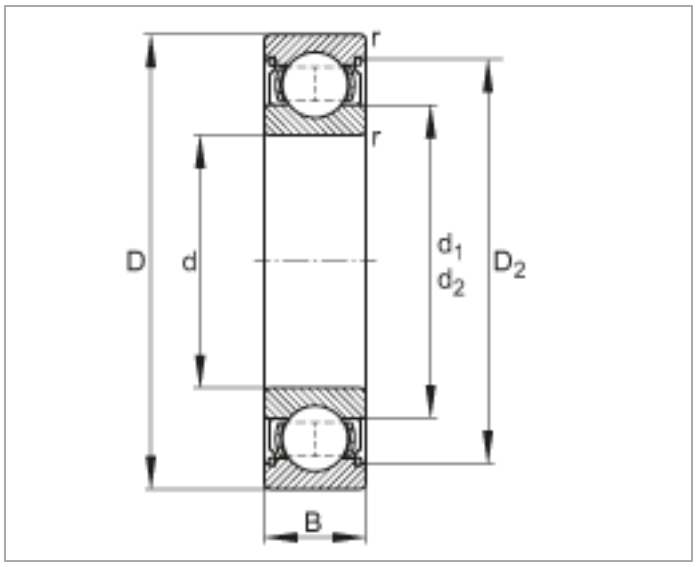
r
r
D
d
d1
d2
D2
B

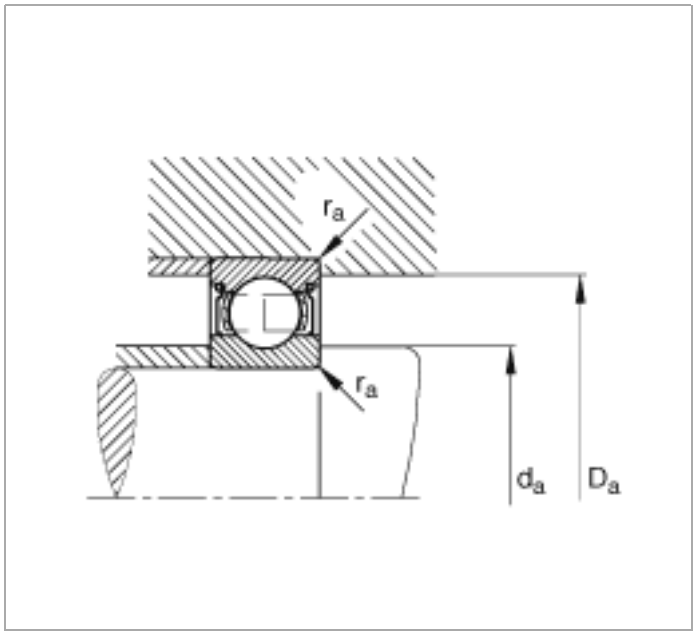
ra
ra
da
Da