Datasheet - AZM300B-ST-1P2P

Solenoid interlock / AZM300



(Minor differences between the printed image and the original product may exist!)

- Suitable for mounting to profile systems
- Thermoplastic enclosure
- 3 different directions of actuation
- Compact design
- 3 LEDs to show operating conditions
- Suitable for hinged and sliding guards
- Series-wiring
- Manual release
-
- Connector M12, 8-pole
- Power to unlock
- Actuator monitored
- Diagnostic output

Ordering details

Product type description	AZM300B-ST-1P2P
Article number	103001411
EAN code	
eCl@ss	27-27-26-03

Approval

Approval	cULus USA/CAN TÜV TÜV ECOLAB

Classification

Standards	EN ISO 13849-1, IEC 61508
PL	e
Control category	4
SIL	3
Mission time	20 Years
PFH value	5.2 x 10^{-10} /h

Global Properties

Product name	AZM300
Standards	EN 60947-5-1, IEC 60947-5-3, IEC 61508, EN ISO 13849-1
Compliance with the Directives (Y/N) CE	Yes
Suitable for safety functions (Y/N)	Yes
Series-wiring	Yes
Length of the sensor chain	max. 200 m
Active principle	RFID
Coding	
Coding levels according to ISO 14119	low
Duty cycle	100 %
Materials	
- Material of the housings	Plastic, glass-fibre reinforced thermoplastic
Housing coating	None
Weight	
Guard locking monitored (Y/N)	No
Actuator monitored (Y/N)	Yes
Idle assignable pushbutton and LED (Y/N)	No
Reaction time	< 120 ms
Duration of risk	< 200 ms
Time to readiness	5 s
Recommended actuator	AZ/AZM300-B1

Mechanical data

Design of electrical connection	Connector M12, 8-pole, A-coded
Mechanical life	≥ 1.000.000 operations
notice - Mechanical life ()	≥ 50000 operations for guards ≤ 5 kg; actuating speed ≤ 0,5 m/s
Switch distance S_n	2 mm
Ensured switch distance ON S_{ao}	1 mm
Ensured switch distance OFF S_{ar}	20 mm
restistance to shock	30 g / 11 ms
Resistance to vibration	10 … 150 Hz, Amplitude 0,35 mm
Emergency unlocking device (Y/N)	No
Manual release (Y/N)	Yes
Emergency release (Y/N)	No
Latching (Y/N)	Yes
Latching force	25 N / 50 N
Clamping force F_{max}	1000 N
Actuator and interlock misalignment	≤ 2°
fixing screws	2 x M6

Ambient conditions

Ambient temperature	
- Min. environmental temperature	0 °C
- Max. environmental temperature	+60 °C
Storage and transport temperature	
- Min. Storage and transport temperature	−10 °C
- Max. Storage and transport temperature	+90 °C
Protection class	IP66, IP67 to IEC/EN 60529 IP69K to DIN 40050-9
Protection rating	II

Air clearances and creepage distances To IEC/EN 60664-1	
- Rated impulse withstand voltage U_{imp}	0,8 kV
- Overvoltage category	III
- Degree of pollution	3

Electrical data

Number of auxiliary contacts	0 piece
Number of safety contacts	2 piece
Cross circuit/short circuit recognition possible (Y/N)	Yes
Power to unlock	Yes
Power to lock	No
Supply voltage U_B (stabilised PELV)	24 VDC −15% / +10%
Switch frequency	0,5 Hz
Operating current	100 mA (without load)
Rated insulation voltage U_i	32 VDC
Operating current I_e	1 A
Utilisation category	DC-13
Required rated short-circuit current	100 A
Device insulation	2 A
notice	Cable length and cable section alter the voltage drop depending on the output current

Electrical data - Safety inputs

Safety inputs	X1 and X2
Switching thresholds	−3 V … 5 V (Low) 15 V … 30 V (High)
Operating current	5 mA / 24 V

Electrical data - Safety outputs

Safety outputs	Y1 and Y2
Design of control output	short-circuit proof, p-type
Rated operating voltage	0 V … 4 V under Supply voltage U_B
Residual current I_r	≤ 0,5 mA
Operating current I_e	0,25 A
Utilisation category	DC-12, DC-13
	< 0,5
	1

Electrical data - Diagnostic output

Serial diagnostics (Y/N)	No
Design of control output	short-circuit proof, p-type
Rated operating voltage U_e	0 V … 4 V under Supply voltage U_B
Operating current I_e	0,05 A
Utilisation category	DC-12, DC-13
Wiring capacitance for serial diagnostics	-
diagnostic signals	guard door closed and interlocking device locked
Operating principle of the diagnostic output	The short-circuit proof diagnostic output OUT can be used for central visualisation or control tasks, e.g. in a PLC.
notice	The diagnostic output is not a safety-relevant output!

Electrical data - Solenoid control IN

Rated operating voltage U_e	−3 V … 5 V (Low) 15 V … 30 V (High)
Switching thresholds	−3 V … 5 V (Low) 15 V … 30 V (High)
Operating current I_e	10 mA / 24 V
Operating current	10 mA / 24 V

LED switching conditions display

LED switching conditions display (Y/N)	Yes
LED switching conditions display	
- Supply voltage U_B	green LED
- switching condition	yellow LED
- Error functional defect	red LED

ATEX

Explosion protection categories for gases	None
Explosion protected category for dusts	None

Dimensions

Dimensions of the sensor	
- Width of sensor	85 mm
- Height of sensor	100 mm
- Length of sensor	35 mm

Pin assignment

1	A1 Supply voltage U_B
2	X1 Safety input 1
3	A2 GND
4	Y1 Safety output 1
5	OUT Diagnostic output
6	X2 Safety input 2
7	Y2 Safety output 2
8	IN Solenoid control

notice

As lons as the actuating unit remains inserted in the solenoid interlock, the unlocked safety guard can be relocked. The safety outputs then will be enabled again; opening the safety guard therefore is not required.

Included in delivery

Actuators must be ordered separately.

Ordering code

AZM300**(1)(2)**-ST**(3)**-**(4)**-**(5)**

(1)

Z	Guard locking monitored

B	Actuator monitored
(2)	
without	Included in standard versioncoding
I1	Individual coding
I2	Individual coding, multiple teaching
(3)	
1P2P	1 Diagnostic output, p-type and 2 Safety outputs, p-type
SD2P	serial diagnostic output and 2 Safety outputs, p-type
(4)	
without	Power to unlock
A	Power to lock
(5)	
without	Manual release
T	Emergency unlocking device
N	Emergency release

Documents

Operating instructions and Declaration of conformity (it) 1 MB, 27.02.2015
Code: mrl_azm300_it

Operating instructions and Declaration of conformity (sv) 1 MB, 27.02.2015
Code: mrl_azm300_sv

Operating instructions and Declaration of conformity (en) 1 MB, 09.01.2015
Code: mrl_azm300_en

Operating instructions and Declaration of conformity (da) 371 kB, 22.08.2013
Code: mrl_azm300_da

Operating instructions and Declaration of conformity (es) 1 MB, 27.02.2015
Code: mrl_azm300_es

Operating instructions and Declaration of conformity (de) 1 MB, 09.01.2015
Code: mrl_azm300_de

Operating instructions and Declaration of conformity (fr) 1 MB, 03.12.2014
Code: mrl_azm300_fr

Operating instructions and Declaration of conformity (cs) 1 MB, 24.11.2014
Code: mrl_azm300_cs

Operating instructions and Declaration of conformity (nl) 1 MB, 16.10.2014
Code: mrl_azm300_nl

Operating instructions and Declaration of conformity (pt) 376 kB, 09.04.2013
Code: mrl_azm300_pt

Operating instructions and Declaration of conformity (pl) 1 MB, 27.02.2015
Code: mrl_azm300_pl

Brochure (es) 2 MB, 03.05.2013
Code: b_azm300p01_es

Brochure (jp) 1 MB, 13.03.2013
Code: b_azm300p01_jp

Brochure (pt) 1 MB, 03.05.2013
Code: b_azm300p01_pt

Brochure (it) 1 MB, 03.05.2013
Code: b_azm300p01_it

Brochure (fr) 2 MB, 03.05.2013
Code: b_azm300p01_fr

Brochure (br) 2 MB, 08.03.2013
Code: b_azm300p01_br

Brochure (br) 2 MB, 03.05.2013
Code: b_azm300p01_br

Brochure (nl) 1 MB, 03.05.2013
Code: b_azm300p01_nl

Brochure (en) 3 MB, 03.05.2013
Code: b_azm300p01_en

Brochure (de) 764 kB, 03.05.2013
Code: b_azm300p01_de

Brochure (pl) 2 MB, 03.05.2013
Code: b_azm300p01_pl

TÜV certification (de, en) 227 kB, 10.12.2013
Code: z_azmp05

ECOLAB certification (en) 94 kB, 08.04.2013
Code: q_azmp03

ECOLAB certification (de) 93 kB, 08.04.2013
Code: q_azmp02

Images

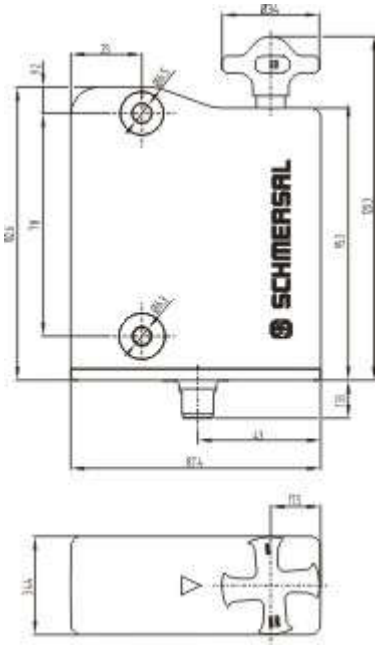

Dimensional drawing (basic component)

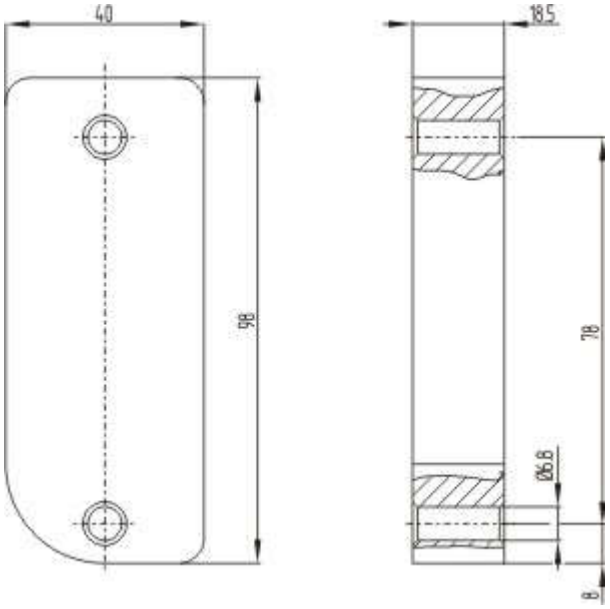

Dimensional drawing (miscellaneous)

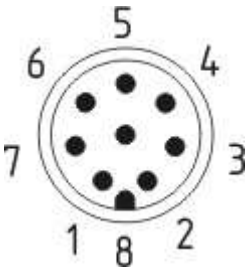

Contact arrangement

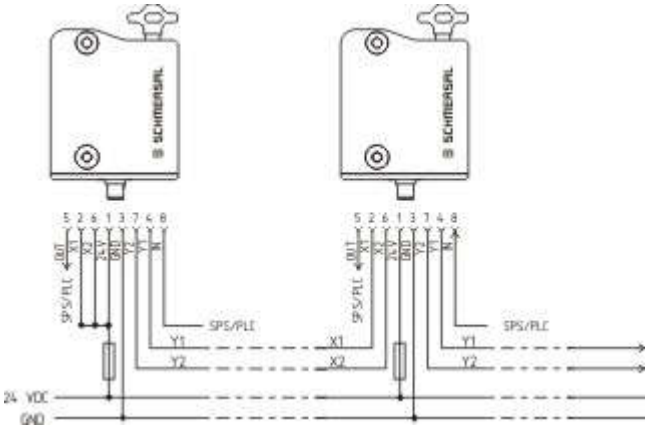

Wiring example

System components

Actuator



101218025 - AZ/AZM300-B1

• 3 different directions of actuation

Accessories



103002891 - MS-AZ/AZM300-B1-1



103003172 - MP-AZ/AZM300-1