TF sensors

Flexible TF current sensors

used with DIRIS Digiware, DIRIS A-40 and DIRIS B



TF *Flexible current sensors*

Function

TF flexible **current sensors** measure the load currents of an electrical circuit and send the data to meters and Power Monitoring Devices or current modules via an RJ12 plug-and-play connection. Thanks to a wide measurement range, TF current sensors cover a wide current range from 100 to 6000 A, with only 7 references. TF flexible current sensors can be used with DIRIS Digiware I modules, DIRIS A-40 and DIRIS B.

Advantages

Plug & Play

- A rapid RJ12 connection makes wiring easy and reliable and prevents wiring errors. This also allows automatic detection of the sensor type and rating.
- The sensors can be installed in both directions.

Accuracy according to IEC 61557-12

- Class 0.5 for the global measuring chain (PMD + TF current sensors) from 2 to 120% of the nominal current I_n.
- Accuracy is guaranteed regardless of the position of the conductor in the loop.

Safe locking mechanism(1)

- The locking system prevents the loop from opening, guaranteeing continuous functioning and accuracy even under harsh conditions.

Installation

- The TF flexible sensor range is specially designed for existing installations with strict integration constraints or with high-intensity currents.

Simplified installation

- The Rogowski integrator is directly integrated to the RJ12(1) cable enabling a quick and compact integration (no DIN rail assembly required) inside electrical panels.
- The integrator is self supplied by the PMD through the RJ12 cable and does not need any external power supply.

(1) Except for TF-55.

Installation

Cable mounting



Bar mounting

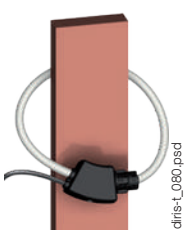

The solution for

- Industry
- Building
- Infrastructure
- Data centers



Strong points

- Plug & Play
- Accuracy according to IEC 61557-12
- Safe locking mechanism
- Installation
- Simplified installation

Integrated technologies

PreciSense

For more information see our website www.socomec.com

Compliance with standards

- IEC 61557-12
- ISO 14025
- UL

Create your project

- Find the best DIRIS Digiware configuration: **www.meter-selector.com**

METER SELECTOR DIGITAL TOOL AVAILABLE

Dimensions (mm)

TF-55

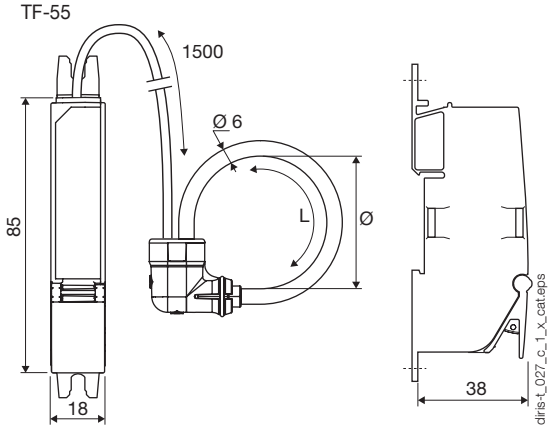

TF-40 and TF-80 to TF-600

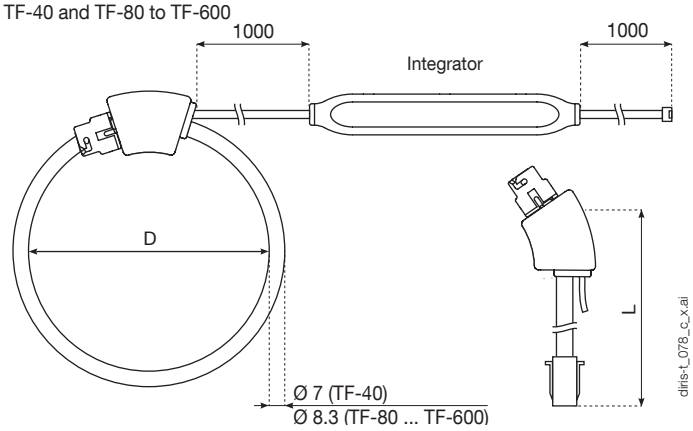

Model	Nominal current range (A)	Real range covered (A)	D = Ø loop (mm)	L = Loop length (mm)
TF-40	100 ... 400	2 ... 480	40	126
TF-55	150 ... 600	3 ... 720	55	173
TF-80	150 ... 600	3 ... 720	80	251
TF-120	400 ... 2000	8 ... 2400	120	377
TF-200	600 ... 4000	12 ... 4800	200	628
TF-300	1600 ... 6000	32 ... 7200	300	942
TF-600	1600 ... 6000	32 ... 7200	600	1885
Integrator dimensions: 128 x 19 x 15 mm				

Technical characteristics

Model	TF-40	TF-55	TF-80	TF-120	TF-200	TF-300	TF-600
Nominal current range I_n (A)	100 ... 400	150 ... 600	150 ... 600	400 ... 2000	600 ... 4000	1600 ... 6000	1600 ... 6000
Real range covered (A)	2 ... 480	3 ... 720	3 ... 720	8 ... 2400	12 ... 4800	32 ... 7200	32 ... 7200
Weight (g)	114	114	130	142	164	193	274
Max. voltage (phase/neutral)	600 V						
Rated withstand voltage	3.6 kV						
Accuracy class	0.5 in association with DIRIS Digiware I, DIRIS A-40, DIRIS B based on IEC 61557-12						
Frequency	50 / 60 Hz						
Intermittent overload	10 x In for 1 s						
Measurement category	CAT III						
Protection degree	IP30 / IK07						
Operating temperature	-10 to +70°C						
Storage temperature	-25 to +85°C						
Relative humidity	95% RH non-condensing						
Altitude	< 2000 m						
Connection	Socomec cable or equivalent RJ12 straight, twisted pair, unshielded, 600 V, -10 ... +70 °C						

References

Model	Nominal current range (A)	Real range covered (A)	D = Ø loop (mm)	L = Loop length (mm)	Reference
TF-40	100 ... 400	2 ... 480	40	126	4829 **0573**
TF-55	150 ... 600	3 ... 720	55	173	4829 **0570**
TF-80	150 ... 600	3 ... 720	80	251	4829 **0574**
TF-120	400 ... 2000	8 ... 2400	120	377	4829 **0575**
TF-200	600 ... 4000	12 ... 4800	200	628	4829 **0576**
TF-300	1600 ... 6000	32 ... 7200	300	942	4829 **0577**
TF-600	1600 ... 6000	32 ... 7200	600	1885	4829 **0578**
Accessories					**Reference**
Female/female connector for extension of the RJ12 connection between PMD and TF sensor					4829 **0670**

RJ12 connection cables	Cable length (m)									
	0.1	0.2	0.3	0.5	1	2	3	5	10	50 m reel + 100 connectors
Number of cables	Reference	Reference	Reference	Reference	Reference	Reference	Reference	Reference	Reference	Reference
1	-	-	-	-	-	-	-	4829 **0602**	4829 **0603**	4829 **0601**
3	4829 **0580**	4829 **0581**	4829 **0582**	4829 **0595**	4829 **0583**	4829 **0584**	4829 **0606**	-	-	-
4	-	-	-	4829 **0596**	4829 **0588**	4829 **0589**	-	-	-	-
6	4829 **0590**	4829 **0591**	4829 **0592**	4829 **0597**	4829 **0593**	4829 **0594**	-	-	-	-