JUMO GmbH & Co. KG
Delivery address: Mackenrodtstraße 14
36039 Fulda, Germany
Postal address: 36035 Fulda, Germany
Phone: +49 661 6003-0
Fax: +49 661 6003-607
E-mail: mail@jumo.net
Internet: www.jumo.net

JUMO Instrument Co. Ltd.
JUMO House
Temple Bank, Riverway
Harlow, Essex CM20 2DY, UK
Phone: +44 1279 635533
Fax: +44 1279 635262
E-mail: sales@jumo.co.uk
Internet: www.jumo.co.uk

JUMO Process Control, Inc.
6733 Myers Road
East Syracuse, NY 13057, USA
Phone: 315-437-5866
1-800-554-5866
Fax: 315-437-5860
E-mail: info.us@jumo.net
Internet: www.jumousa.com

JUMO dTRANS T01 HART® / T01T HART® / T01 Junior / T01 Ex / T01 HART® Ex Programmable 2-wire transmitter

for connection to resistance thermometers and thermocouples
for installation in : terminal head Form B to DIN 43729
for mounting on : rail



Type 707011/... (HART®),
Type 707015/... (Ex),
Type 707016/... (HART® Ex)



Type 707014/... (Junior)



Type 707013/... (HART®)

Brief description

The 2-wire transmitter uses resistance thermometers or thermocouples to acquire the temperature. With resistance thermometers, the probe can be connected in 2-/3- or 4-wire circuit.
Probe type, connection circuit and range can be configured using the setup program. The 4 ... 20mA output signal (or reversed 20 ... 4mA) is available in linearized form (linear with temperature).
The instrument is designed for industrial application and conforms to the corresponding European Standards, to ensure electromagnetic compatibility (EMC).
The versions 707015/... and 707016/... are electrical apparatus for use in hazardous areas.
The transmitters JUMO dTRANS T01 (Types 707011/..., 707013/... and 707016/...) can also be programmed using a HART® modem in conjunction with a PC setup program.

System diagrams

Connection examples (Types 707011/... to 707014/...) with power supply unit

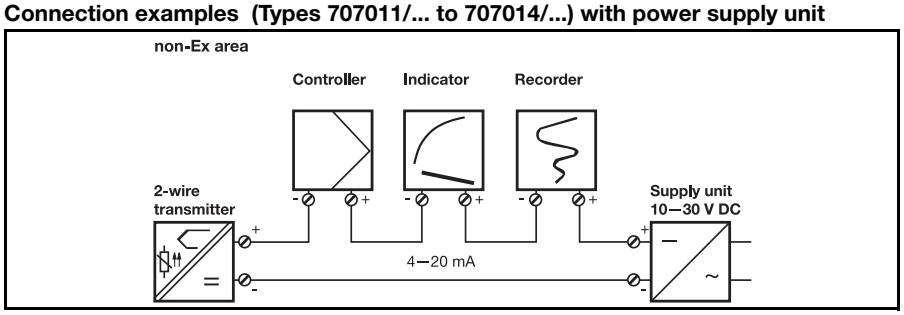

Connection examples (Types 707015/... and 707016/...) for Ex application with Ex supply isolator

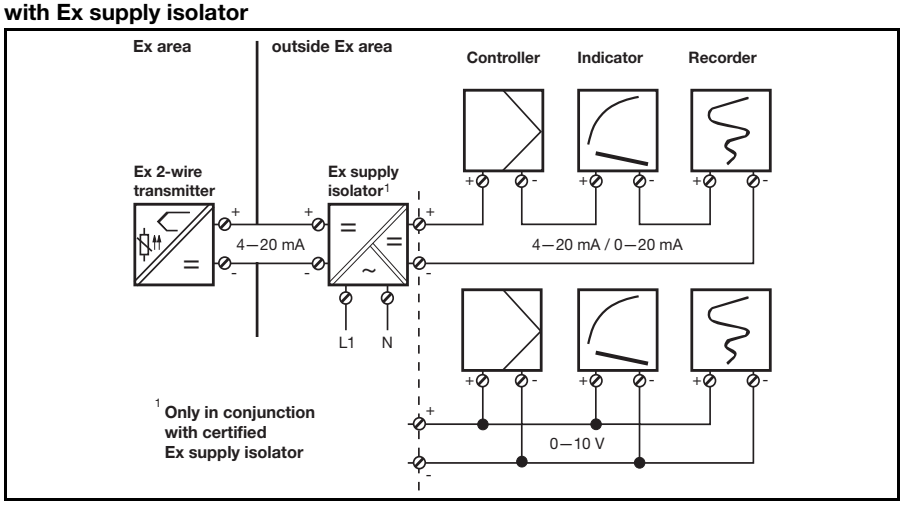

Features

- Types 707011/..., 707013/... and 707016/... with HART® interface
- Type 707015/... Ex version
  ⟨Ex⟩ II 1 G Ex ia IIC T6
- Type 707016/... with HART® interface and as Ex version
  ⟨Ex⟩ II 1 G Ex ia IIC T6/T5/T4
  II 2 G Ex ia IIC T6/T5/T4
- Type 707013/... in rail-mounting housing
- input and output electrically isolated
- freely configurable ranges
- customized linearization for resistance thermometer and thermocouple (excepting 707014/…)
- configuration via Windows setup program

Technical data

Input for Thermocouple for the types 707011/..., 707013/..., 707015//..., 707016/...

Designation	Range limits	Accuracy[a] (typical)
Fe-CuNi „L“ DIN 43710[c]	-200 … +900°C	typ. 0,5 K
Fe-CuNi „J“ DIN EN 60584	-210 … +1200°C	typ. 0,5 K above -150°C
Cu-CuNi „U“ DIN 43710[c]	-200 … +600°C	typ. 0,5 K
Cu-CuNi „T“ DIN EN 60584[c]	-270 … +400°C	typ. 0,5 K above -200°C
NiCr-Ni „K“ DIN EN 60584	-270 … +1372°C	typ. 0,5 K above -140°C
NiCr-CuNi „E“ DIN EN 60584[c]	-270 … +1000°C	typ. 0,5 K above -150°C
NiCrSi-NiSi „N“ DIN EN 60584[c]	-270 … +1300°C	typ. 1 K above -100°C
Pt10Rh-Pt „S“ DIN EN 60584[c]	-50 … +1768°C	typ. 2 K above 20°C
Pt13Rh-Pt „R“ DIN EN 60584[c]	-50 … +1768°C	typ. 2 K above 50°C
Pt30Rh-Pt6Rh „B“ DIN EN 60584[c]	0 … 1820°C	typ. 2 K above 400°C
MoRe5-MoRe41[b]	0 ... 2000°C	typ. 2 K above 500°C
W3Re-W25Re „D“[c]	0 ... 2495°C	typ. 1 K above 500°C
W5Re-W26Re „C“[c]	0 ... 2320°C	typ. 1 K above 500°C
Shortest span	Type L, J, U, T, K, E, N: 50 K Type S, R, B: 500 K Type MoRe5-MoRe41, D, C: 500 K	
Cold junction	Pt100 internal or external cold junction (adjustable from 0 ... 80 °C)	
Cold junction accuracy	±1 K	
Sampling rate	>1 measurement per second	
Sensor current	350 nA	
Input filter	1st order digital filter; filter constant adjustable: - on Type 707015/... within the range 0 ... 125 sec - on Types 707011/..., 707013/... and 707016/... within the range 0 ... 100 sec	
Features	also programmable in °F; freely programmable range limits; input isolated from output	

[a] The accuracy refers to the maximum range span.
[b] Only for type 707015/....
[c] For type 707013/... on request only.

Input resistance thermometer for the types 707011/..., 707013/..., 707015/..., 707016/...

Designation	Range limits	Range	Accuracy[a]
Pt100 DIN EN 60751	-200 … +850°C	-100 … +200 °C -200 … +850 °C	±0,2 K ±0,4 K
Pt100 JIS	-200 … +649°C	-100 … +200 °C -200 … +649 °C	±0,2 K ±0,4 K
Pt500 DIN	-200 … +250°C	-100 … +200 °C -200 … +250 °C	±0,2K ±0,4 K
Pt1000 DIN	-200 … +250°C	-100 … +200 °C -200 … +250 °C	±0,2 K ±0,4 K
Ni100	-60 … +250°C	-60 … +250 °C	±0,2 K
Ni500	-60 … +150°C	-60 … +150 °C	±0,2 K
Ni1000	-60 … +150°C	-60 … +150 °C	±0,2 K
Connection circuit	2-,3- or 4-wire circuit		
Shortest span	10 K		
Sensor lead resistance - for 3-, 4-wire connection - for 2-wire connection	≤ 11 Ω per conductor measuring resistance + ≤22 Ω internal lead resistance		
Sensor current	< 0,6 mA		
Sampling rate	> 1 measurement per second		
Input filter	1st order digital filter; filter constant adjustable: - on type 707015/...within a range 0 … 125 s - on types 707011/..., 707013/... and 707016/... within a range 0 … 100 s		
Features	also programmable in °F; freely programmable range limits; input isolated from output		

[a] The accuracy refers to the maximum range span.

Input thermocouple for the type 707014/...

Designation			Range limits	Accuracy[a] (typical)
Fe-CuNi	„J“	DIN EN 60584	-210 … +1200 °C	typ. 0,5K above -150 °C
NiCr-Ni	„K“	DIN EN 60584	-270 … +1372 °C	typ. 0,5K above -140 °C
NiCrSi-NiSi	„N“	DIN EN 60584	-270 … +1300 °C	typ. 1K above -100 °C
Pt10Rh-Pt	„S“	DIN EN 60584	-50 … +1768 °C	typ. 2K above 20 °C
Pt13Rh-Pt	„R“	DIN EN 60584	-50 … +1768 °C	typ. 2K above 50 °C
Shortest span			Type J, K, N: 50K Type S, R: 500K	
Cold junction			Pt100 internal or external cold junction (adjustable from 0 ... 80 °C)	
Cold junction accuracy			±1 K	
Sampling rate			>1 measurement per second	
Sensor current			350nA	
Input filter			1st order digital filter; filter constant adjustable: - on type 707014/... within the range 0 … 125s	
Features			also programmable in °F; freely programmable range limits; input isolated from output	

[a] The accuracy refers to the maximum range span.

Input resistance thermometer for the type 707014/...

Designation		Range limits	Range	Accuracy[a]
Pt100	DIN EN 60751	-200 … +850 °C	-100 … +200 °C -200 … +850 °C	±0,2 K ±0,4 K
Pt100	JIS	-200 … +649 °C	-100 … +200 °C -200 … +649 °C	±0,2 K ±0,4 K
Pt1000	DIN	-200 … +250 °C	-100 … +200 °C -200 … +250 °C	±0,2 K ±0,4 K
Connection circuit		2-,3- or 4-wire circuit		
Shortest span		10K		
Sensor lead resistance - for 3-, 4-wire connection - for 2-wire connection		≤ 11 Ω per conductor measuring resistance + ≤22 Ω internal lead resistance		
Sensor current		< 0,6 mA		
Sampling rate		> 1 measurement per second		
Input filter		1st order digital filter; filter constant adjustable: - on type 707014/... within the range 0 … 125 s		
Features		also programmable in °F; freely programmable range limits; input isolated from output		

[a] The accuracy refers to the maximum range span.

Measurement circuit monitoring

Underrange	linear drop to 3.8 mA (as per NAMUR recommendation 43)
Overrange	linear rise to 20.5 mA (as per NAMUR recommendation 43)
Probe short circuit / probe and lead break	resistance thermometer: ≤ 3.5 mA or ≥ 21.0 mA (configurable) thermocouple: ≤ 3.5 mA or ≥ 21.0 mA (configurable)[a]
Current limiting on probe short circuit or probe break	≤ 23 mA

[a] Probe short-circuit recognition is not possible for thermocouple.

Output

	Types 707010/..., 707012/..., 707015/...	Types 707011/..., 707013/..., 707016/...
Output signal	proportional DC current 4 ... 20 mA, 20 ... 4 mA	
Electrical isolation Test voltage	between input and output U_{peak} = 3.75 kV/50 Hz	between input and output U = 2.0 kV/50 Hz
Transfer characteristic	linear with temperature	
	customized linearization	
	reversion of output signal	
Burden (Rb)	Rb = (Ub - 8 V) / 0.022 A	Rb = (Ub - 10V) / 0.022A
Burden error	≤ ± 0.02 % / 100 Ω[a]	
Calibration conditions / accuracy	24V DC at approx. 22 °C / ≤ ± 0.05 %[a]	
1st order digital filter	0 — 125 sec configurable	0 — 100 sec configurable
Step response 0 — 100 %	< 2 sec (with filter constant 0 sec)	
Switch-on delay (correct measurement after connecting the supply voltage only after ...)	5 sec	4 sec

[a] All specified values refer to 20 mA full scale.

Custom linearization

Types 707011/..., 707013/..., 707016/... - Number of calibration points - Polynomial	maximum: 40 with linear interpolation 4th order polynomial
Type 707015/... - Number of calibration points	maximum: 40 with linear interpolation
Type 707014/...	No custom linearization available

Supply

Supply voltage (Ub) with reverse polarity protection	Type 707014/...: DC 8 ... 35V Type 707015/...: DC 8 ... 30V	Type 707011/...: DC 11,5 ... 35V Type 707013/...: DC 11,5 ... 35V Type 707016/...: DC 11,5 ... 30V
Supply voltage error	≤ ± 0,01 % per V deviation from 24 V[a]	

[a] All specified values refer to 20 mA full scale.

Environmental influences

Operating temperature range	-40 to +85 °C	
Storage temperature range	-40 to +100 °C	
Temperature error	resistance thermometer: ≤ ± 0.005 % per °C deviation from 22 °C[a] thermocouple: ≤ ± 0.005 % per °C deviation from 22 °C[a] plus accuracy of cold junction	
Long-term stability	≤ 0.1 °C per year[b] or ≤ 0.05 % per year[b,c]	
Climatic conditions	rel. humidity ≤ 95 %, with condensation	
Vibration strength	according to GL characteristic 2	
Electromagnetic compatibility (EMC) - interference emission - immunity to interference	EN 61326-1 Class B to industrial requirements	
IP protection - in terminal head - open mounting - on rail	IP54 IP00	Types 707011/... and 707016/...: IP66 Types 707011/... and 707016/...: IP00 Type 707013/...: IP20

[a] All specified values refer to 20 mA full scale
[b] under calibration conditions
[c] % refer to the selected span. The larger value applies.

Housing

	Types 707011/..., 707014/..., 707015/..., 707016/...	707013/...
Material	polycarbonate (encapsulated)	polycarbonate
Screw terminal	≤ 1.75 mm²; max. tightening torque 0.6 Nm	≤ 2.5 mm²; max. tightening torque 0.6 Nm
Mounting	in terminal head Form B DIN 43729; in surface-mounting case (on request); in switchgear cabinet (mounting bracket is required)	on DIN rail 35mm x 7.5mm (EN 60715); on DIN rail 15mm (EN 60715); on G rail (EN 60715)
Operating position	unrestricted	
Weight	approx. 40g	approx. 90g

Version 707015/... (Ex) - Extract from the EC Type-Examination Certificate ZELM 99 ATEX 0018X

Marking	⟨Ex⟩ II 1 G Ex ia IIC T6
Temp. range in “II 2 G” and “II 3 G”	T6 = -40 to +55°C / T5 = -40 to +70°C / T4 = -40 to +75°C
Temp. range in “II 1 G”	T6 = -40 to +40°C / T5 = -40 to +50°C / T4 = -40 to +60°C
Supply circuit Max. values at the terminals 1(+) and 2(-) Internal inductance and capacitance	U_i = 30V DC I_i = 100 mA P_i = 750 mW L_i = negligible C_i = negligible
Sensor circuit Max. values at the terminals 3, 4, 5 and 6 Max. permissible external inductance and capacitance Ex ia IIC Ex ia IIB	U_o = 9.6V DC I_o = 4.5 mA P_o = 11 mW linear output characteristic L_o = 4.5 mH / C_o = 709 nF L_o = 8.5 mH / C_o = 1300 nF

Version 707016/... (Ex) - Extract from the EC Type-Examination Certificate PTB 01 ATEX 2124

Marking	⟨Ex⟩ II 1 G Ex ia IIC T6/T5/T4 II 2 G Ex ia IIC T6/T5/T4
Temp. range in “II 2 G” and “II 3 G”	T6 = -40 to +55 °C / T5 = -40 to +70 °C / T4 = -40 to +85 °C
Temp. range in “II 1 G”	T6 = -20 to +40 °C / T5 = -20 to +50 °C / T4 = -20 to +60 °C
Supply circuit Max. value at the terminals 1(+) and 2(-) Internal inductance and capacitance	U_i = 30 VDC I_i = 100 mA P_i = 750 mW L_i = negligible C_i = negligible
Sensor circuit Max. values at the terminals 3, 4, 5 and 6 Internal inductance and capacitance Connected circuit **without** lumped external inductance or capacitance Connected circuit **with** lumped external inductance or capacitance Ex ia IIC Ex ia IIB, Ex ia IIA	U_o = 5 V DC I_o = 5.4 mA P_o = 6.6 mW linear characteristic L_i = negligible C_i = negligible L_o = 1000 mH C_o = 100 µF L_o = 100 mH / C_o = 2 µF L_o = 100 mH / C_o = 9.9 µF

Approvals/marks of conformity

Mark of conformity	Testing laboratory	Certificates/ certification numbers	Test basis	valid for
II 1 G Ex ia IIC T6	ZELM Ex	ZELM 99 ATEX 0018 X	EN 60079-0:2009 EN 60079-11:2007 EN 60079-26:2007 EN 1127-1:2007	Type 707015/...
II 1 G Ex ia IIC T6/T5/T4 II 2 G Ex ia IIC T6/T5/T4	PTB	PTB 01 ATEX 2124	EN 60079-0:2006 EN 60079-11:2007 EN 60079-26:2004	Type 707016/...

Setup program

The setup program is available for configuring the transmitter from a PC. With Types 707014/... and 707015/... , the connection is via the PC interface with a an USB/TTL converter and the setup interface of the transmitter, in the case of Types 707011/..., 707013/... and 707016/..., via a HART® modem. The connection for the setup circuit must only be used outside the hazardous area. It is not permissible to configure the transmitter inside the Ex area.
The protective cover must be closed after programming type 707015/... .

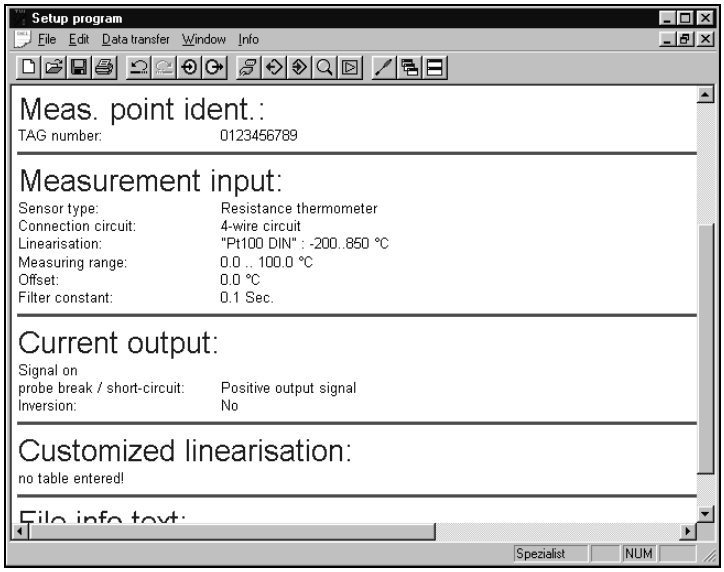

Configurable parameters

TAG number (10 characters) on Types 707011/..., 707013/... and 707016/..., 8 characters only, but with additional 16-character description	Sensor type
Connection circuit (2-/3-/4-wire)	External and internal cold junction
Customized linearization	Range limits
Output signal rising/falling (reversion)	Digital filter
Response to probe break/short circuit	Recalibration/fine calibration (not on Types 707011/..., 707013/... and 707016/...)
Lead resistance with 2-wire circuit	

If no power supply (supply isolator) is available, the 2-wire transmitter Type 707010/..., 707012/... or 707015/... has to be configured using a 9V block battery as a power source.

Fine calibration (not on Types 707011/..., 707013/... and 707016/...)

Fine calibration means correction of the output signal. The signal can be adjusted within ± 5 % of the 20 mA full-scale value. Fine calibration is performed through the setup program. Values for 4 mA (zero), 20 mA (full scale) and offset can be calibrated separately, via the setup program.

Hardware and software requirements

The following hardware and software requirements must be met when installing and operating the setup program:

IBM-PC or compatible PC from 486DX-2-100	16 MB main memory
15MB free space on hard disk	CD-ROM drive

1 free serial interface or 1 USB interface (e. g. for HART® modem)	Windows 95, 98, ME, NT4.0, 2000 or XP (full USB support is ensured only in Windows XP)

Setup interface (Types 707014/... and 707015/...)

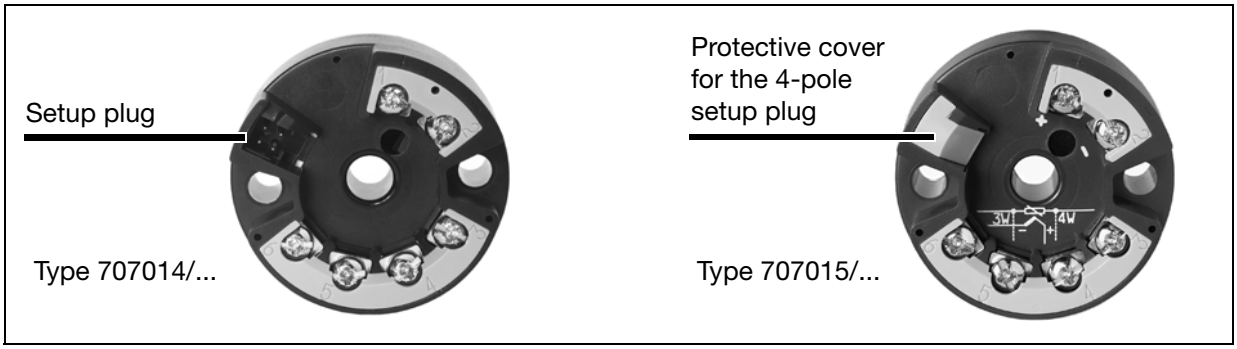

HART® interface (Type 707011/... and 707013/...)

Connection via HART® modem

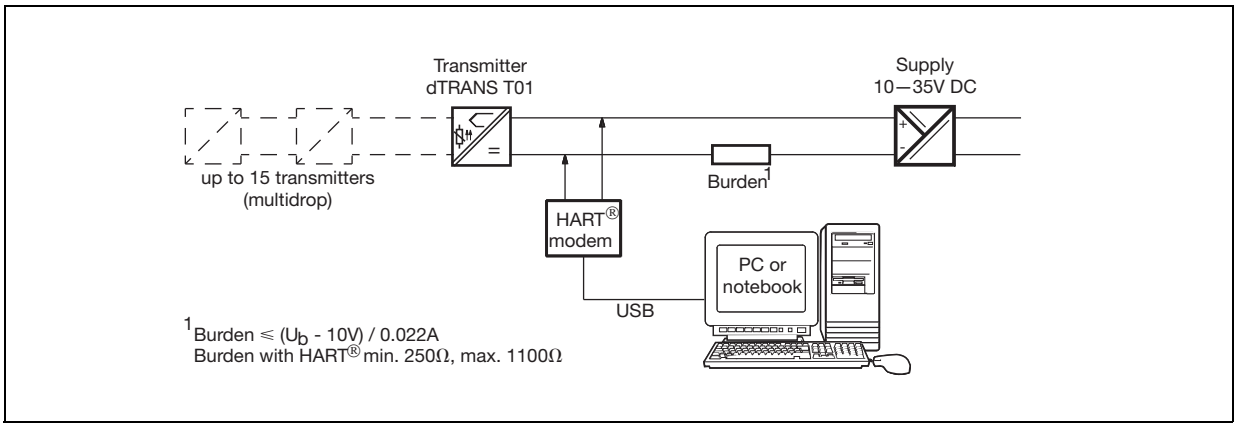

HART® interface (Type 707016/...)

Connection via HART®modem for Ex application

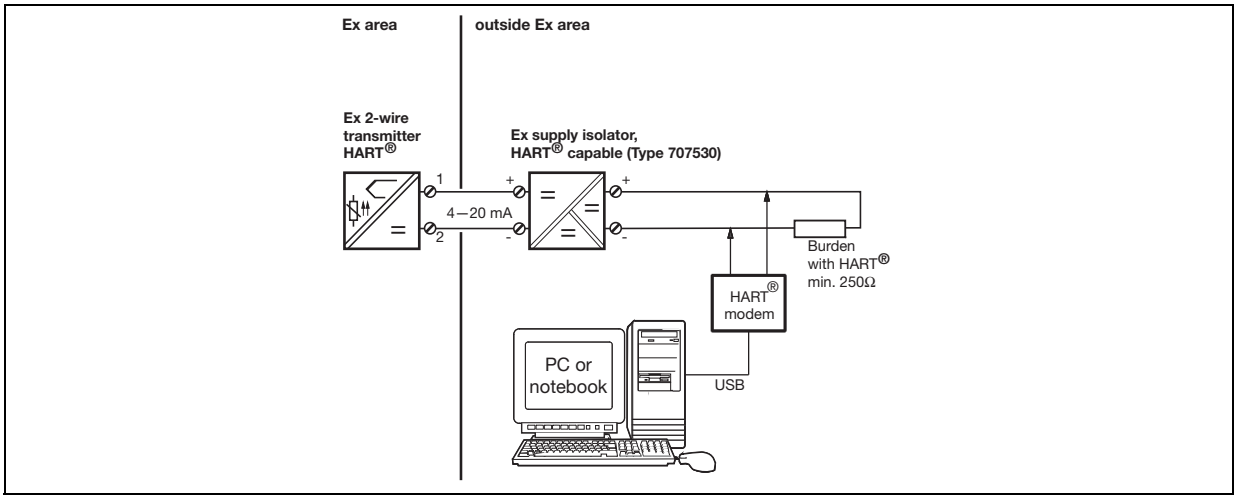

Connection diagram

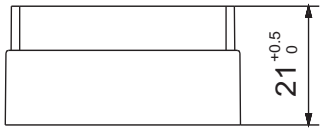

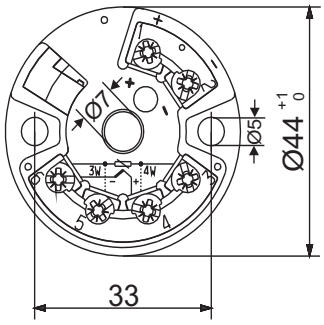

Type 707011/..., Type 707015/..., Type 707016/...

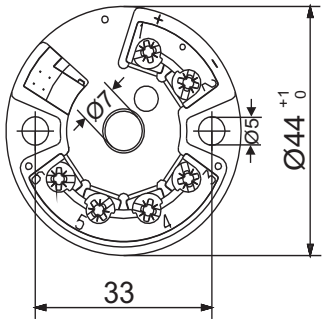

Type 707014/...

Setup

Connection for		Terminals	
→	Supply voltage for Type 707011/... 11,5 ... 35V DC	+1 $R_B = \frac{U_b - 11{,}5V}{22mA}$	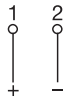
	Supply voltage for Type 707014/... 8 ... 35V DC	-2 $R_B = \frac{U_b - 8V}{22mA}$	
	Supply voltage for Type 707015/... 8 ... 30V DC (Ex)[a]	$R_B = \frac{U_b - 8V}{22mA}$	
	Supply voltage for Type 707016/... 11,5 ... 30V DC (Ex)[a]	$R_B = \frac{U_b - 11{,}5V}{22mA}$	
←	Current output 4 — 20 mA	R_B = burden resistance U_b = supply voltage	
	Ex version only in conjunction with certified Ex transmitter supply unit		
Analog inputs			
→	Thermocouple	+4 -6	
	Resistance thermometer in 2-wire circuit	3 6 $R_L \le 11\ \Omega$ R_L = lead resistance per conductor	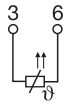
	Resistance thermometer in 3-wire circuit	3 5 6 $R_L \le 11\ \Omega$ R_L = lead resistance per conductor	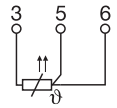
	Resistance thermometer in 4-wire circuit	3 4 5 6 $R_L \le 11\ \Omega$ R_L = lead resistance per conductor	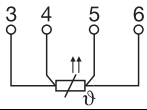
	Ex version: please note connection data of the Ex input circuit!		

[a] On types 707015/... and 707016/... only up to 30V. The connection must only be made to an intrinsically safe circuit.

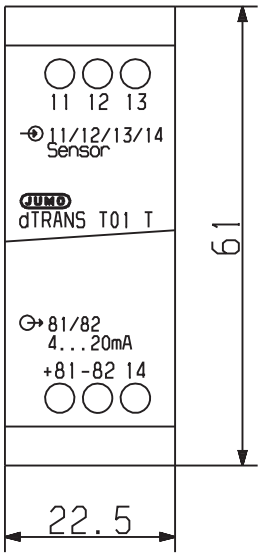

Depth behind panel 98 max.

Connection for		Terminals	
→	Supply voltage for Type 707013/... 11,5 — 35 V DC	+81 $R_B = \frac{U_b - 11{,}5V}{22mA}$	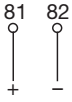
←	Current output 4 — 20 mA	-82 R_B = burden resistance U_b = supply voltage	
Analog inputs			
→	Thermocouple (special feature: see order details)	+11 -12	
	Resistance thermometer in 2-wire circuit	11 13 $R_L \le 11\ \Omega$ R_L = lead resistance per conductor	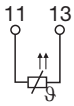
	Resistance thermometer in 3-wire circuit	11 12 13 $R_L \le 11\ \Omega$ R_L = lead resistance per conductor	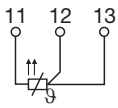
	Resistance thermometer in 4-wire circuit	11 12 13 14 $R_L \le 11\ \Omega$ R_L = lead resistance per conductor	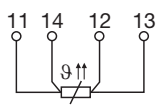

Caution: the order details on P. 9 must be observed

Order details: JUMO dTRANS T01 / T01T

Programmable 2-wire transmitter

						(1)	**Basic type**
					707011		dTRANS T01 B HART® programmable 2-wire transmitter with HART® interface
					707013		dTRANS T01 T HART programmable 2-wire transmitter with HART interface installed in rail mounting housing[a] (Caution: observe the footnotes)
					707014		dTRANS T01 Junior
					707015		dTRANS T01 B Ex programmable 2-wire transmitter with Ex protection Ⓔx II 1 G Ex ia IIC T6
					707016		dTRANS T01 B Ex HART® programmable 2-wire transmitter with HART® interface and Ex protection Ⓔx II 1 G Ex ia IIC T6/T5/T4 II 2 G Ex ia IIC T6/T5/T4
						(2)	**Input (programmable)**
x	x	x	x	x	888		factory-set (Pt100 DIN 4w / 0 ... 100 °C)
x	x	x	x	x	999		configuration to customer specification[b]
						(3)	**Output (proportional DC current)**
x	x	x	x	x	888		factory-set (4 — 20 mA)
x	x	x	x	x	999		configuration to customer specification (20 ... 4 mA)
						(4)	**Probe break/ short circuit**
x	x	x	x	x	888		factory-set (positive protection)
x	x	x	x	x	999		configuration to customer specification (negative protection)
						(5)	**Extra codes**
x	x	x	x	x	000		none
x					243		transmitter in surface-mounting case

	(1)		**(2)**		**(3)**		**(4)**		**(5)**
Order code		/		-		-		/	
Order example	707010	/	888	-	888	-	888	/	243

[a] When ordering, please specify the type of sensor required (thermocouple or resistance thermometer). For thermocouple inputs, the sensor inpt cannot be changed retrospectively, because of the internal compensating cable. For resistance thermometer inputs, all types of resistance thermometes listed on P. 2 can be connected, but no thermocouples. Thermocouple inputs are available on request.

[b] Probe type and range have to be specified in plain text for configuration to customer specification.

Standard accessories

- 1 Operating Instructions
- Fixing items: 2 screws, 2 compression springs (not for Types 707012/... and 707013/...)

Accessories

- PC setup program, multilingual
- PC interface with USB/TTL converter, adapter (socket) and adapter (pins) for Types 707014/... and 707015/...
- Bracket for mounting on DIN rail, part no. 00352463
- HART® modem USB (for Types 707011/..., 707013/... and 707016/...), part no. 00443447
- Power supply units 1- and 4-way (Data Sheet 707500)
- Ex-i power supply/input isolating amplifier (Data Sheet 707530), part no. 00577948