Low-intensity LED Obstruction Light Type A and B

NEW



LED Obstruction Light Type B



LED Obstruction Light Type A - The adaptor (accessory) allows quick and simple mounting on a tube



Plastic bracket, adaptor for tube mounting (accessories)

Sizes of Permanent Beacons



- For use as "Low-intensity Obstruction Light, Type A or B" in accordance with ICAO Annex 14
- NEW 230 V version with or without monitoring function
- Very bright solution which far exceeds the required light output (32 cd)
- High impact resistance to 20 Joules

TECHNICAL SPECIFICATIONS:

Life duration up to 50,000 hrs

Dimensions (Ø x Height):	142 mm x 218 mm
Housing:	PC/ABS-Blend
Lens:	PC, transparent, clear
Fixing:	Base mounting, bracket mounting (accessory), tube mounting (accessory)
Connection:	Screw terminal with wire protection max. 2.5 mm²
Cable entry:	Cable diameter 5-7 mm
Duty cycle:	100 %

Current consumption at failure of 2 of the 12 LED strips: < 50mA

ORDER SPECIFICATIONS:

Low-intensity LED Obstruction Light Type A

Voltage	12-50 V DC
Current consumption	500-100 mA
aviation red	**280 410 55**

NEW **Low-intensity LED Obstruction Light Type B**

Voltage	24 V DC	230 V AC	230 V AC with monitoring funct.
Current consumption	~ 400 mA	~ 200 mA	~ 200 mA / < 50 mA (Failure mode)
aviation red	**280 470 55**	**280 470 68**	**280 480 68**

ACCESSORIES:

Plastic bracket for wall mounting	**975 883 06**
Adaptor for tube mounting	**975 883 09**

ADDITIONAL INFORMATION:

Monitoring function:
To provide enhanced safety for obstruction light applications WERMA has developed a variant with an integrated monitoring function.

Should any two of the twelve LED strips fail, the light will switch to failure mode (see image). This can be detected for example by a current monitoring relay. After repeatedly checking the product status the unit will remain in failure mode for 30 minutes before again checking the status.

Behaviour of defective obstruction light

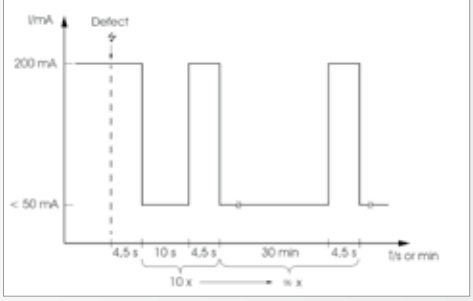

TECHNICAL DIAGRAMS: see page 303

See note on page 347

Obstruction Light



Why do obstacles need to be illuminated?

The law stipulates that buildings of a specific height and in the vicinity of airports as well as factory chimneys, towers, masts etc. must be equipped with obstruction lights.

This special lighting makes obstacles visible for pilots in the dark or when visibility is poor. Obstruction lighting is one of the most important aspects of flight safety.



What directives and regulations are there?

The method of marking obstacles to air traffic is laid down by diverse laws, regulations and recommendations. These regulations have a clearly defined sphere of influence and are **internationally interlinked.**



The International Civil Aviation Organisation **(ICAO)** is a special organisation within the United Nations created to establish and develop universal regulations for safety, continuity and economic efficiency in international air traffic. The recommendations of the ICAO are not directly binding in the member states, but must be transformed by them into the appropriate **national legal regulations.**

In **Germany** the Ministry for Transport and Construction Development **(BMVBS)** issues the regulations covering obstruction lighting on buildings. The **ICAO** regulations regarding the methods of marking and lighting aviation obstacles can be found in ICAO Annex 14.



- **"Low intensity obstacle beacon type A":** a red permanent night-time warning beacon for fixed obstructions with a brightness of 10 cd.
- **"Low intensity obstacle beacon type B":** a red permanent night-time warning beacon for fixed obstructions with a brightness of 32 cd.



Where are obstacle lights deployed?

- **Germany:** Marking of aviation obstacles by night at any height providing the highest point of the obstacle can be marked.
- **According to ICAO:** Marking of aviation obstacles by night up to 45 m ("Low-intensity Obstacle Light, Type A").

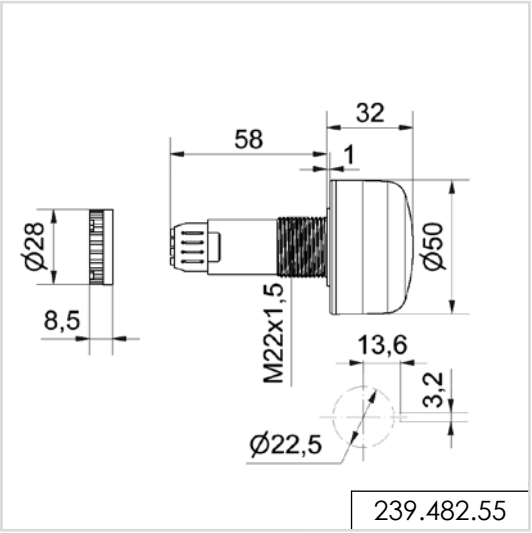

239.482.55

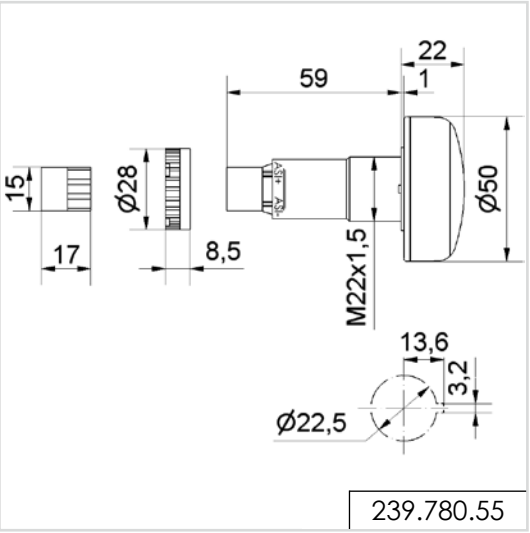

239.780.55

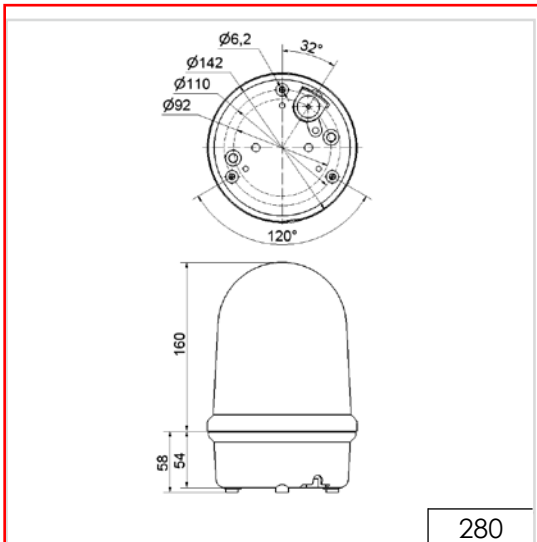

280

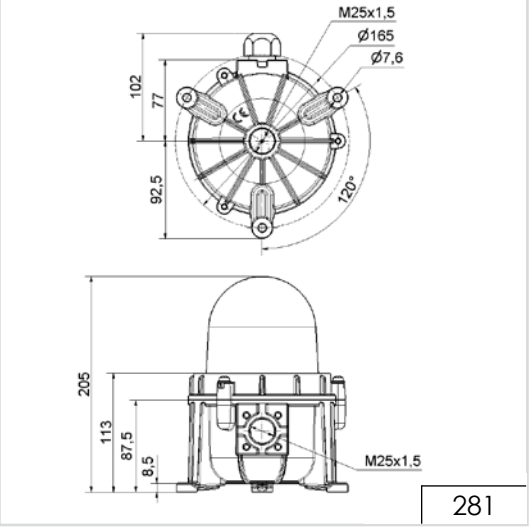

281

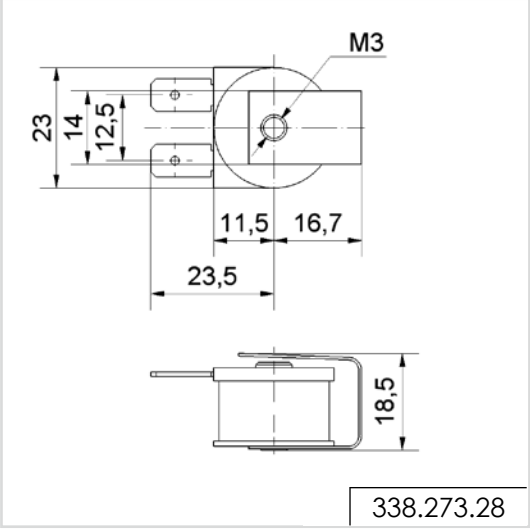

338.273.28

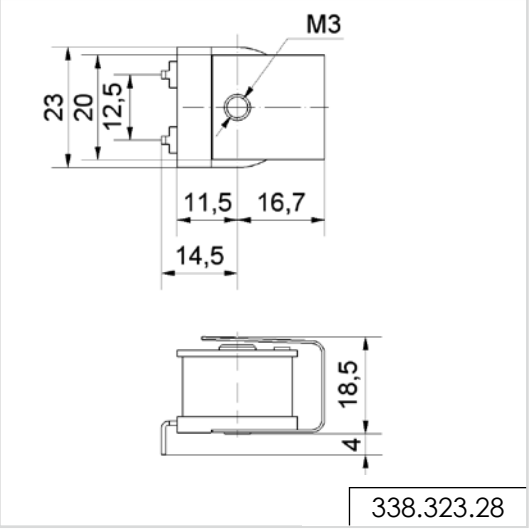

338.323.28

ADDITIONAL INFORMATION:

You are welcome to request the technical diagrams in digital form. The relevant 3D models, instruction leaflets and connection diagrams can be obtained from us or downloaded from our homepage at any time.

WERMA SIGNALTECHNIK 280

EN 60598
EN 60947

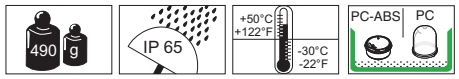



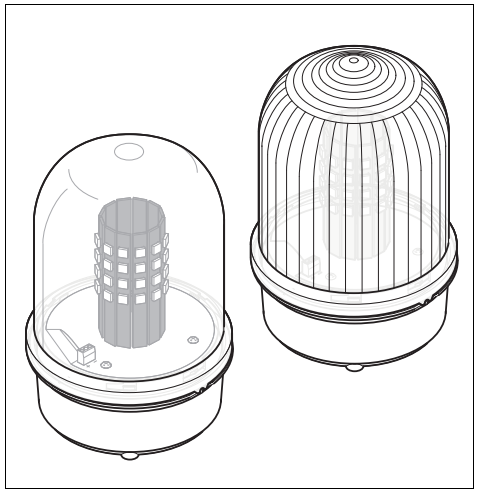



- (D) Anschluss **ausschließlich** durch ausgebildete Elektro-Fachkräfte.
- (GB) Electrical connection is to be made by trained electrical specialists **only**.
- (F) Le branchement doit **uniquement** être effectué par des professionnels.
- (I) Il collegamento deve essere eseguito **solo** da elettricisti specializzati.
- (E) La conexión **sólo** debe ser realizada por electricistas debidamente formados.
- (PT) A ligação deve ser feita **exclusivamente** por profissional elétrico especializado.
- (NL) De aansluiting mag **enkel** gebeuren door erkende vakmensen.
- (CZ) Připojení smí **provádět** pouze kvalifikovaný personál.
- (PL) Podłączenie **wyłącznie** przez specjalistów-elektryków.
- (FI) Liittäminen kuuluu **ainoastaan** koulutettujen sähköalan ammattilaisten tehtäviin.
- (RUS) Подключение проводится только специа-листом-электриком.
- (TR) Bağlantı **sadece** eğitimli elektrik teknisyenleri tarafından yapılmalıdır.
- (CN) 布线需由专业电工执行

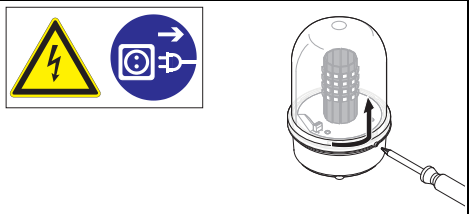

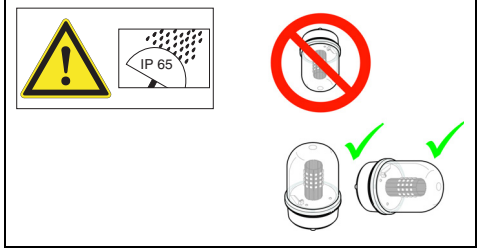



280 410 55	12-50 V=, 12 V=, ~500 mA 50 V=, ~100 mA
280 410 68	230 V~, 50 Hz, ~50 mA
280 x00 55	12-50 V=, 12 V=, ~500 mA 50 V=, ~100 mA
280 x00 68	230 V~, 50 Hz, ~50 mA
280 470 55	24 V=, ~400 mA
280 470 68	230 V~, 50 Hz, ~200 mA
280 480 68	230 V~, 50 Hz, ~200 mA intact: I ~200 mA defect: I < 50 mA

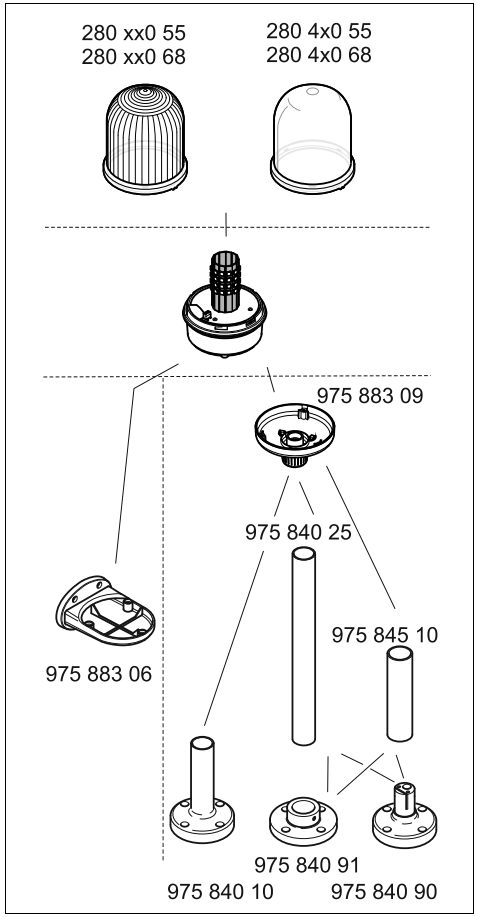

© (D)

WERMA SIGNALTECHNIK
WERMA Signaltechnik GmbH + Co. KG
D-78604 Rietheim-Weilheim
Telefon +49 (0)7424 / 9557-0
Telefax +49 (0)7424 / 9557-44
info@werma.com
www.werma.com



1

1a - 280
1b - 975 883 06
1c - 975 883 09

1a

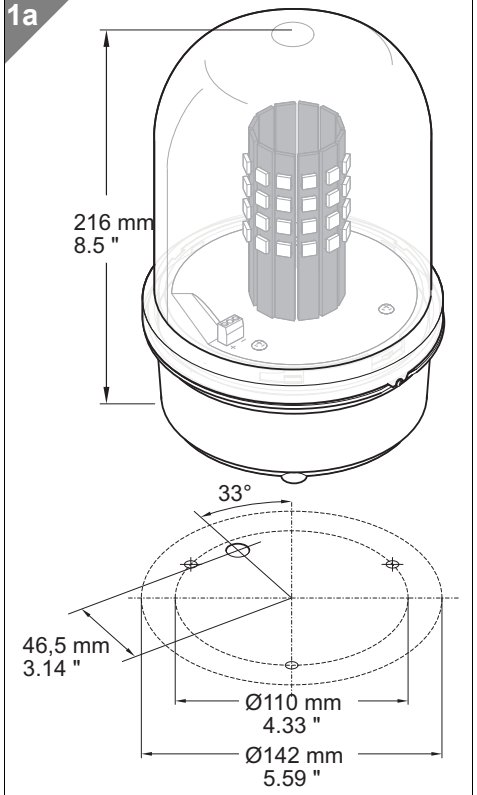

1b

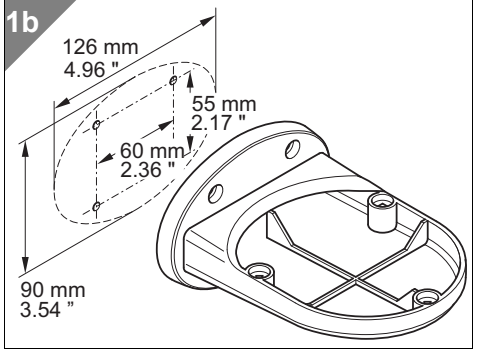

1c

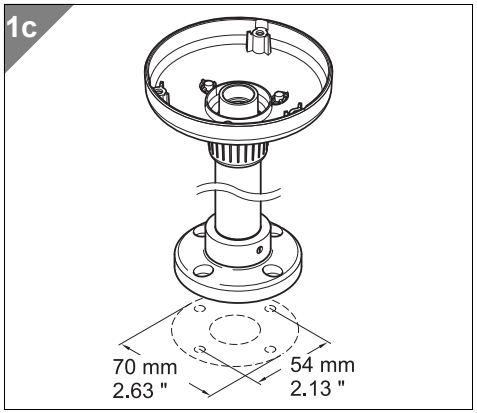

2

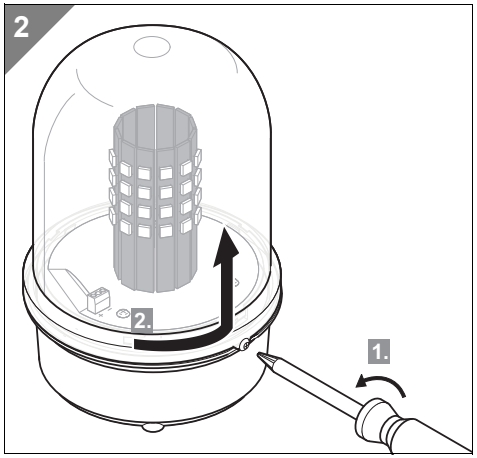

3

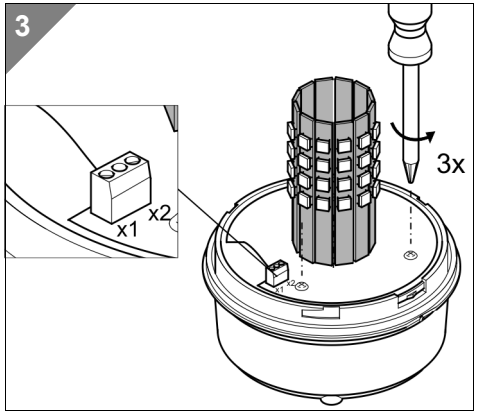

4

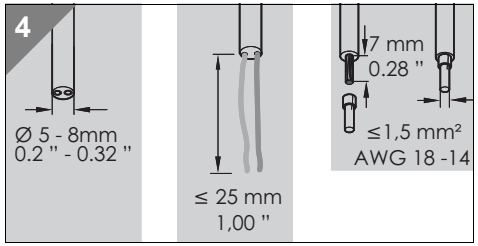

5

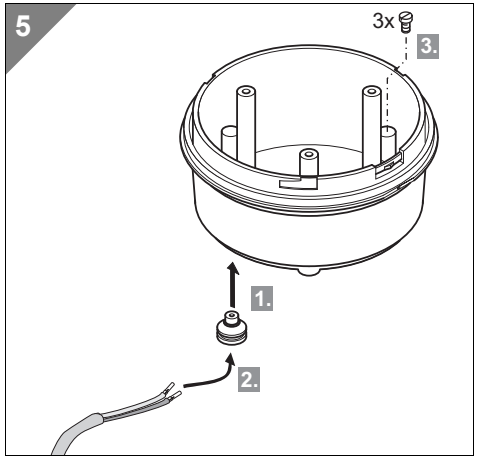

6

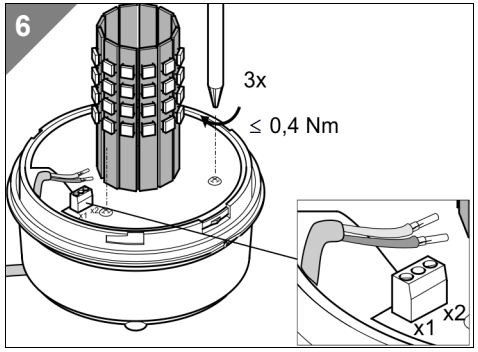

7

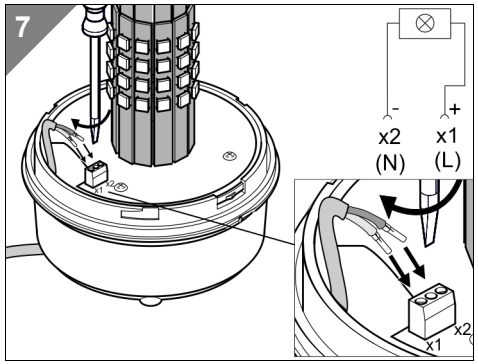

8

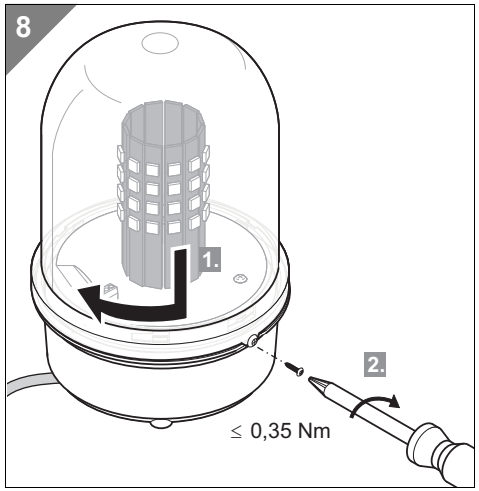

310.280.001.0814

© D

WERMA SIGNALTECHNIK