Bulkhead Connectors

BCC M454-M454-5D-RM002-000
Order Code: BCC06YP

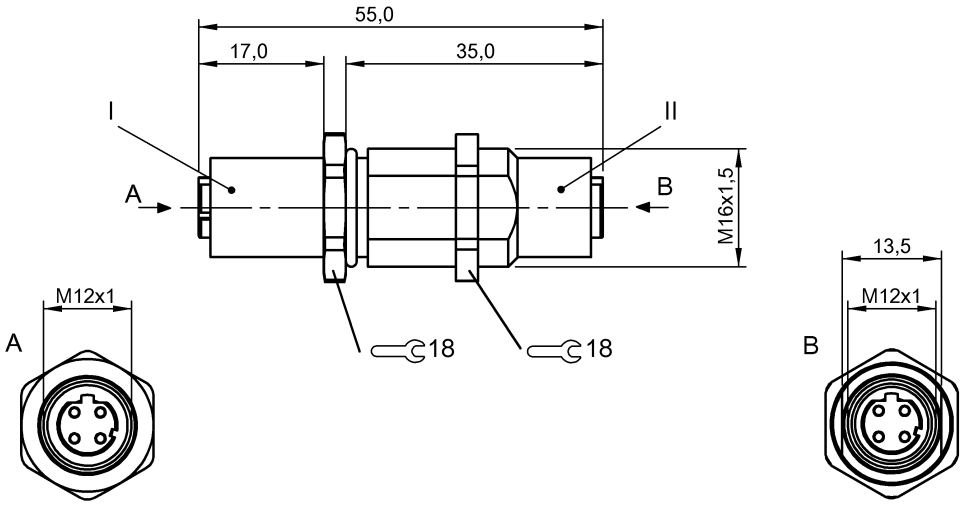

Basic features

Approval/Conformity	CE EAC WEEE

Display/Operation

Function indicator (Pin 2)	no/no
Function indicator (Pin 4)	no/no
Power indicator	no/no

Electrical connection

Connection 1	M12x1-Female, Straight, 4-pin, D-coded
Connection 2	M12x1-Female, Straight, 4-pin, D-coded
Connector 01, version	Straight
Connector 02, version	Straight
Number of pins	4/4

Electrical data

Operating voltage Ub	60 VDC / 60 VAC
Rated current (40 °C)	4.0 A

Environmental conditions

Ambient temperature	-25...80 °C
IP rating	IP67/IP67

Material

Material contact carrier	PA 6
Material contacts	Brass
Material cover nut	Brass
Material grip	Brass

Mechanical data

Mounting part	M16x1.5

Remarks

Enclosure rating per IEC 60529, only in screwed state with the associated mating piece.

BCC M454-M454-5D-RM002-000
Order Code: BCC06YP

Connector Drawings

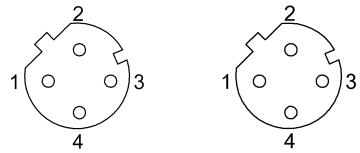

I II

Wiring Diagrams

