E40242

Screw-in adapter for process sensors

ADAPT /SI/1 - 1/4NPT

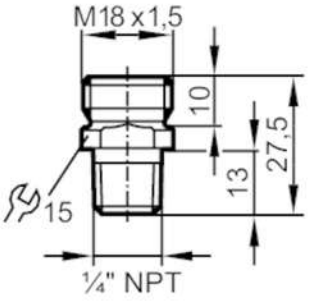

Application		
Media		liquids and gases
Pressure rating	[bar]	300
Tests / approvals		
Pressure Equipment Directive		A possible classification to PED depends on the application and has to be carried out by the user / operator.
Pressure Equipment Directive EAC		The adapter is intended for use in devices, machines and installations that do not fall under the categories of the technical rule TR CU 032/2013.
Safety instructions		The compatibility between medium and product material has to be checked in all applications.
Mechanical data		
Weight	[g]	21.2
Materials		stainless steel (1.4404 / 316L)
Sensor connection		M18 x 1,5
Process connection		threaded connection 1/4" NPT
Remarks		
Pack quantity		1 pcs.