

Tempatron Tel: +44(0)1621 859500 Fax: +44(0)1621 855335

Encapsulated Timers

Models Available

MDE Delay on Energise Timer
MINT Interval Timer
MDD Delay on De-Energise Timer

Product Features

- Encapsulated solid state timer modules
- 0.5 to 20 seconds or 5 to 200 seconds
- 10 to 30Vdc powered
- PCB or panel mounting
- Local or remote potentiometer versions

The Tempatron encapsulated timers are available in pcb mounting (external potentiometer) or panel mounting (internal potentiometer) versions. The internal potentiometer version is supplied with a calibrated self adhesive panel label whilst the external pcb mounting version requires a 500kohm linear potentiometer.

These timers can either operate a delay on energise, interval or delay on de-energise function and are available in two time ranges, 0.5 to 20 seconds or 5 to 200 seconds.

The encapsulated timers are powered from 10 to 30Vdc and have an open collector output. The timers are reset by removing the power supply.

For timing control of machinery, systems and operational processes

Dimensions

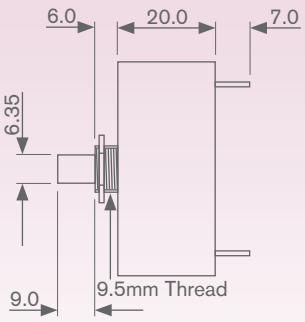

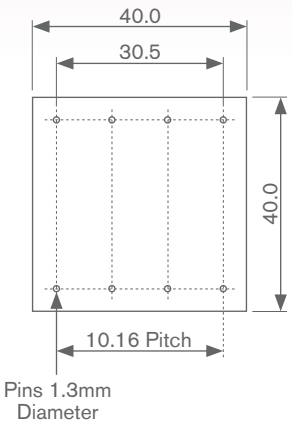

All dimensions in mm

Connections

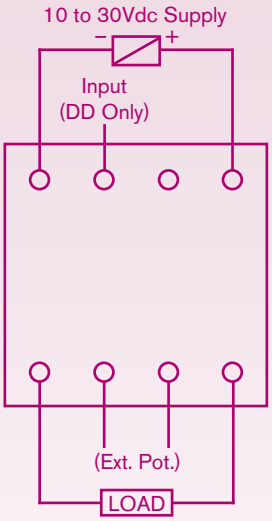

View on pins

Ordering information

Model	Code	Description
	MDE	Encapsulated Delay on Energise Timer
	MINT	Encapsulated Interval Timer
	MDD	Encapsulated Delay on De-Energise Timer

Time Range	Code	Description
	20S	0.5 to 20 seconds
	200S	5 to 200 seconds

Potentiometer	Code	Description
	LP	Local (Internal) Potentiometer
	RP	Remote Potentiometer

Auxiliary Power	Code	Description
	30VDC	10 to 30Vdc

Options	Code	Description
	Preset	Factory Preset Fixed Time Range (specify)

Example	**MDE20SLP30VDC**

Specification

Repeat Accuracy:
- ±1% at constant ambient
- Setting accuracy ±10%

Power Supply Voltage:
- 10 to 30Vdc

Voltage Stability:
- 1% over supply range

Burden:
- <1W

Output:
- 150mA maximum current sink

Linearity:
- >3% of full scale

Reset Time:
- 50ms approx.

External Potentiometer:
- 500kohm linear

Operating Temperature:
- -20°C to 60°C

Temperature Variation:
- <1% over full range

Enclosure Code:
- Case IP65

Weight:
- 80g

Markings:
- CE marked (meets EN61010-1 low voltage and EN50081-1/50082-1 EMC directives)

Specification subject to change without notice.

Tempatron: Eltime House, Hall Road, Maldon, Essex, CM9 4NF UK.

TEMPATRON

Tempatron Industrial Controls is a division of Eltime Ltd.

© Eltime Ltd. Tempatron Encapsulated Timers 04/2011