

# RKX series

## Low Profile and Microminiature SMT Top Tact Switch

**(For external)**

Daisy Liu

March 2021

CONFIDENTIAL – INTERNAL USE ONLY

# Agenda

- Market needs
- Product Overview : Features and Benefits
- Market Overview & Applications


CONFIDENTIAL – INTERNAL USE ONLY

# Market Needs

- With both global automotive keyfob and medial device business recovering from year 2020, the global demand is progressing at a CAGR of over 3% during the forecast period. Rising demand of automotive electronics and medical device are one of the major factors driving the market. C&K as one of biggest global switch solution, plans to add RKX series to meet the market need, including the exact  product performance together with a proper price .





# RKX Product Overview and Features



## Low Profile and Microminiature SMT Top Actuated TACT

- Low profile and Compact size of SMT version Tactile
- Multi- options of actuation forces and long life cycle in automotive and medical application

## FEATURES

- Low profile and Microminiature package
  RKA2 with 0.55mm low profile 4.5 x 4.5 mm
  RKB2 with 2.5 mm height 4.2 x 3.2 mm size
  RKC with 1.4 mm height 3.5 x 2.6 mm size
- SMT termination
- Hard actuator
- Multi-Options on actuation force
  RKA2 with 160gf, 250gf, 400gf, 540gf
  RKB2 with 180gf, 250gf, 400gf
  RKC with 450gf
- Up to 500K cycles

## BENEFITS

- Small and Compact size, low profile, giving designers the choice for the interface design
- Fully integrated into reflow soldering standard processes, meaning time & costs are reduced for the end equipment manufacturer
- Can be used without the additional cost and integration difficulties associated with using an additional interface button
- Offering only the most common versions used by the market allows C&K to keep tight controls on design.
- Reliability for your application, meaning less chance of costly repair or rework charges

# RK Series - Specification

| Specification | RKA2 Series  | RKB2 Series  | RKC Series  |
|---|---|---|---|
| **Circuit configurations** | SPST, momentary contact function | SPST, momentary contact function | SPST, momentary contact function |
| **Rating** | 20mA @ 15 V DC | 50 mA @ 12 V DC | 50 mA @ 12 V DC |
| **Electrical life** | 100k-500k cycles<br>Depending upon actuation force selected | 50k-100k cycles<br>Depending upon actuation force selected | 200k cycles |
| **Operating Temperature** | -40°C to 90°C | -40°C to 90°C | -40°C to 85°C |
| **Operating force** | 160gf; 250 gf; 400gf, 540gf versions | 180gf; 250 gf; 400gf versions | 450 gf versions |
| **Travel** | 0.2mm | 0.2mm | 0.15mm |
| **Product Height** | 0.55 mm | 2.5mm | 1.4 mm |

# RKX Series Applications

- **Target markets**

  - ✓ Automotive keyfob
  - ✓ Medical equipment





**Typical Applications**

- Keyfob
- Navigation
- Health & medical devices



# RKX Series - Applications



Keyfob



Navigation for  vehicle



Medical devices



Health Monitoring

# RKX series Build–A–Switch

## Understanding of product characteristic & functionality

- How to order

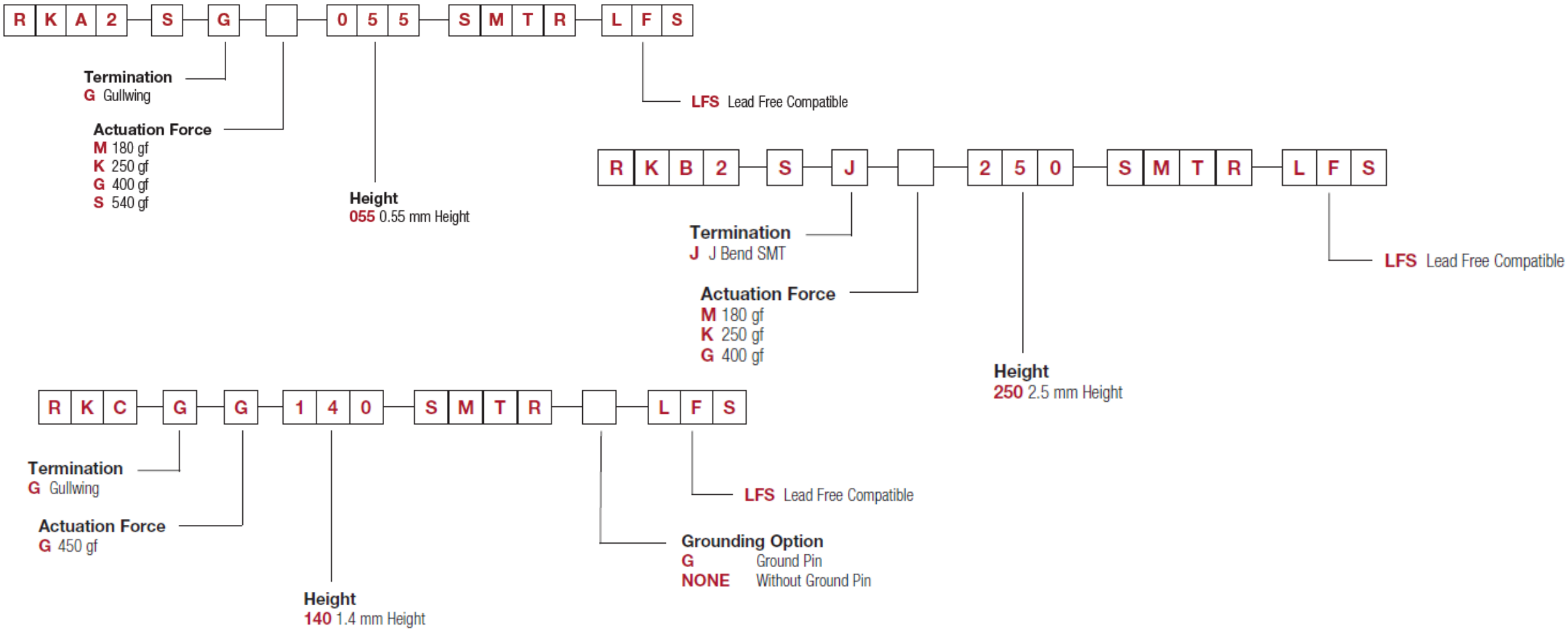



CONFIDENTIAL – INTERNAL USE ONLY