S-4000

1/4" x 1-1/4" Fuse blocks



Agency information

Environmental compliance

RoHS

Product features

- For 1/4"x 1-1/4"fuses
- Fuse block
- 250 Vac rating and up to 25 A

Ordering part number

BK2-S-4 2 01-1 D-R

- Packaging prefix
- Family name
- Terminal type: 0= solder terminal, 2= 1/4" quick connect
- Terminal angle: 01= flat, 02= 40 degree angle, 04= through-hole
- Number of poles:
- Option: Blank= single anti-rotational pin, X= no anti-rotational pin, D= dual anti-rotational pin
- RoHS compliant

Packaging prefix

- BK2- (2000 parts per case pack)
- BK4- (4000 parts per carton)

Powering Business Worldwide

Specifications

Part number	Voltage rating (Vac)	Current rating (A)	Body material	Contact/clip material	Agency
BK4-S-4004-1-R	250	10	Phenolic laminate	Clip: brass, nickel plated Rivet: Aluminum alloy	-CE
BK4-S-4001-1-R	250	10	Phenolic laminate	Clip: brass, nickel plated Rivet: Aluminum alloy	-CE
BK2-S-4201-1D-R	250	25	PA66-GF25, UL 94V-0, black	Clip: copper alloy, tin plated Terminals: brass, tin plated Rivet: aluminum alloy	cURus, CE
BK2-S-4201-1-R	250	25	PA66-GF25, UL 94V-0, black	Clip: copper alloy, tin plated Terminals: brass, tin plated Rivet: aluminum alloy	cURus, CE
BK2-S-4201-1X-R	250	25	PA66-GF25, UL 94V-0, black	CClip: copper alloy, tin plated Terminals: brass, tin plated Rivet: aluminum alloy	cURus, CE
BK2-S-4202-1D-R	250	25	PA66-GF25, UL 94V-0, black	Clip: copper alloy, tin plated Terminals: brass, tin plated Rivet: aluminum alloy	cURus, CE
BK2-S-4202-1-R	250	25	PA66-GF25, UL 94V-0, black	Clip: copper alloy, tin plated Terminals: brass, tin plated Rivet: aluminum alloy	cURus, CE
BK2-S-4202-1X-R	250	25	PA66-GF25, UL 94V-0, black	Clip: copper alloy, tin plated Terminals: brass, tin plated Rivet: aluminum alloy	cURus, CE

Dimensions- mm

BK4-S-4004-1-R

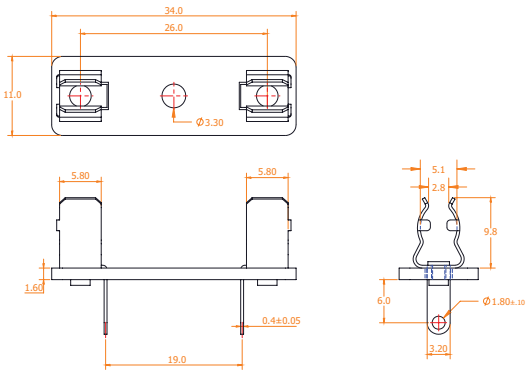

BK4-S-4001-1-R

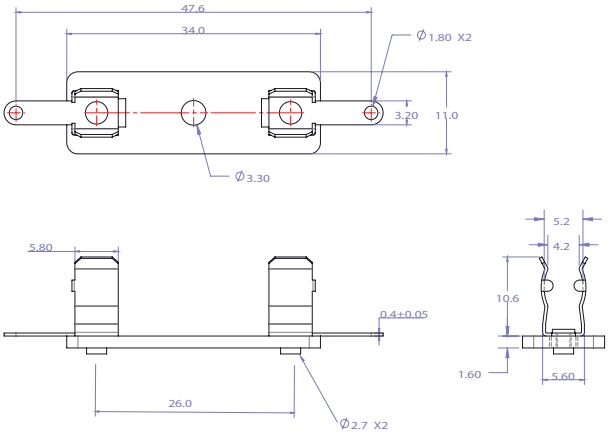

BK2-S-4201-1D-R

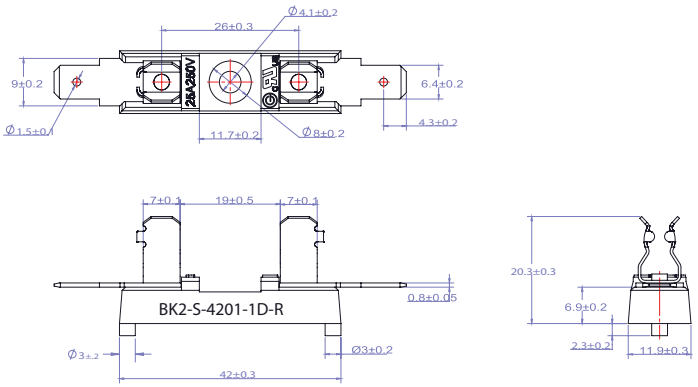

BK2-S-4201-1-R

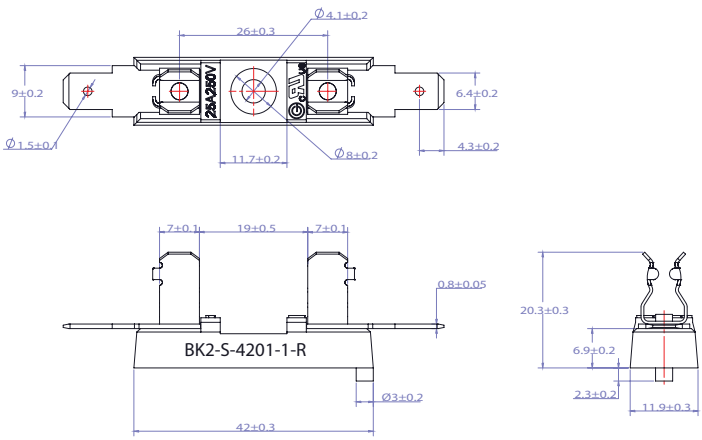

Dimensions- mm

BK2-S-4201-1X-R

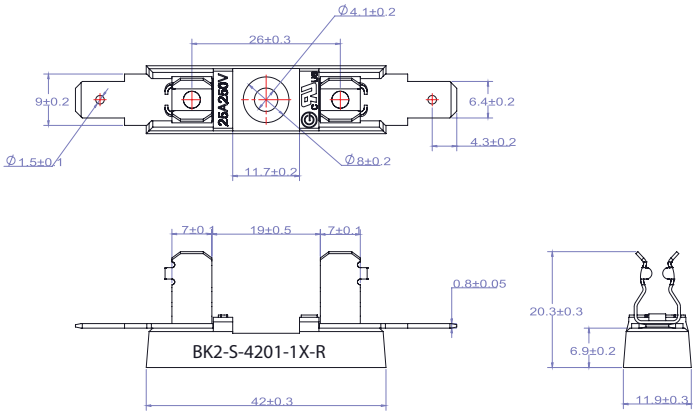

BK2-S-4202-1D-R

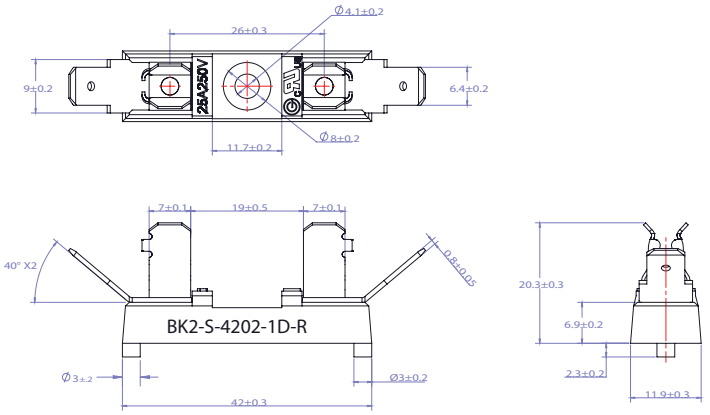

BK2-S-4202-1-R

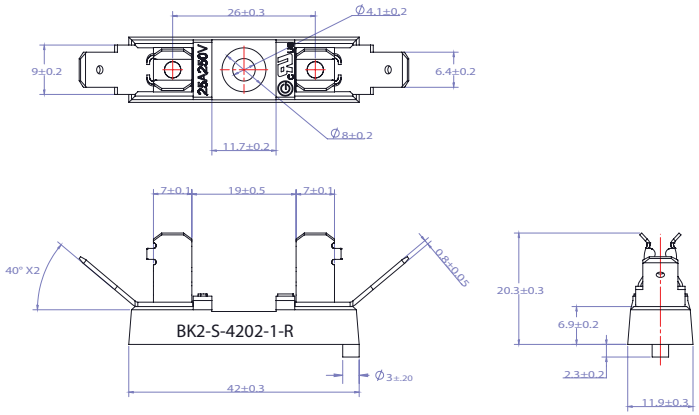

BK2-S-4202-1X-R

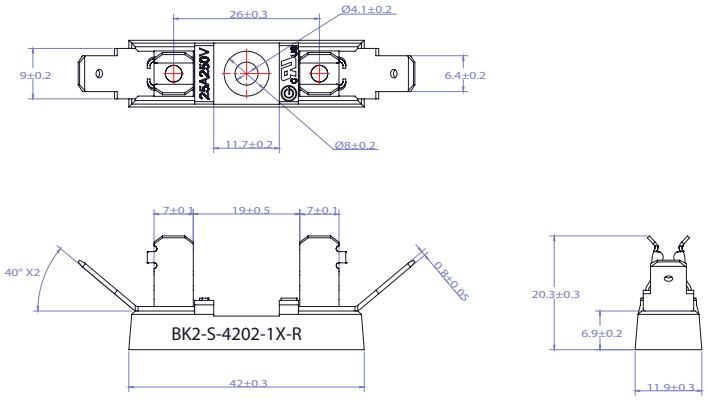

Life Support Policy: Eaton does not authorize the use of any of its products for use in life support devices or systems without the express written approval of an officer of the Company. Life support systems are devices which support or sustain life, and whose failure to perform, when properly used in accordance with instructions for use provided in the labeling, can be reasonably expected to result in significant injury to the user.

Eaton reserves the right, without notice, to change design or construction of any products and to discontinue or limit distribution of any products. Eaton also reserves the right to change or update, without notice, any technical information contained in this bulletin.

Eaton
Electronics Division
1000 Eaton Boulevard
Cleveland, OH 44122
United States
Eaton.com/electronics

© 2021 Eaton
All Rights Reserved
Printed in USA
Publication No. ELX1018 BU-ELX21019
February 2021

Eaton is a registered trademark.

All other trademarks are property of their respective owners.

Follow us on social media to get the latest product and support information.