6U 18in Depth Wall-Mount Server Rack

Product Diagram (RK619WALLO)

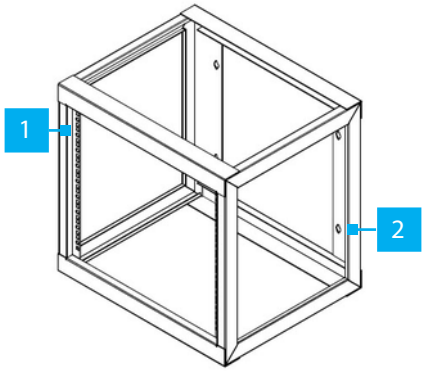

	Component	Function
1	Square Mounting Holes	• Used to mount equipment in the **Wall-Mount Rack**.
2	Mounting Holes	• Used to secure the **Wall-Mount Rack** to a **Mounting Surface**. • **Wall-Mount Rack's** maximum weight capacity = 175 lbs (80 kg).

Requirements

For the latest requirements, please visit www.startech.com/RK619WALLO

- (Optional) Cage Nut Tool x 1
- (Optional) Spirit/Bubble Level x 1
- Phillips Head Screwdriver x 1
- Mounting Hardware (sold separately)

Mounting the Wall-Mount Rack

Fasten the **Wall-Mount Rack** to a **Mounting Surface** using the appropriate **Mounting Hardware**. Verify that the **Wall-Mount Rack** is level with a **Spirit/Bubble Level** before fastening it to a **Mounting Surface**.

Warning! *The* **Wall-Mount Rack** *is designed to be installed on a wood stud, solid concrete, or cinder block wall. The wall structure should be capable of supporting at least four times the weight of the mounted equipment. Contact a construction professional to install the* **Wall-Mount Rack**. *Failure to do so may result in personal injury and/or equipment damage.*

Installing a Shelf or Equipment

1. Insert the **M6 Cage Nuts** into the **Square Mounting Holes** on the **Mounting Rails**. Insert one side of the **M6 Cage Nut** (included) into the **Square Mounting Hole** and push the other side into the **Square Mounting Hole**, until it locks into place.

   Note: *Use a* **Cage Nut Tool** *(sold separately) if you are having issues installing the M6 Cages Nuts* into the Rack.

2. Align the **Mounting Holes** on the **Equipment** with the **M6 Cages Nuts** installed in step 2.
3. Insert an **M6 Screw** through a **M6 Plastic Washer** (included) and through the **Mounting Holes** on the **Equipment** and into the **M6 Cage Nut**.
4. Using a **Phillips Head Screwdriver** tighten the **M6 Screws**, being careful not to over-tighten.

Product Dimensions

Front

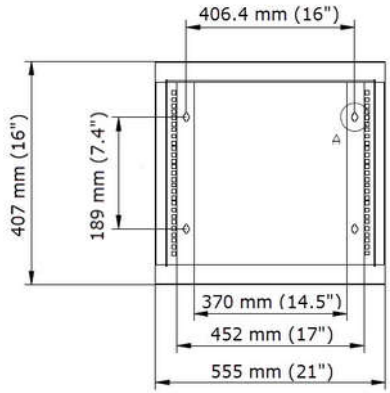

Top View

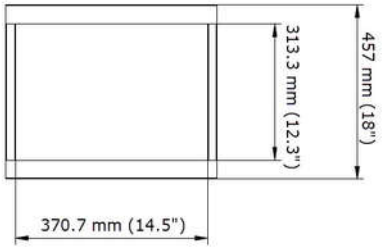

Side

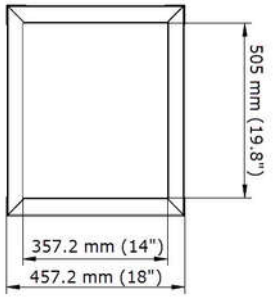

Use of Trademarks, Registered Trademarks, and other Protected Names and Symbols

This manual may make reference to trademarks, registered trademarks, and other protected names and/or symbols of third-party companies not related in any way to StarTech.com. Where they occur these references are for illustrative purposes only and do not represent an endorsement of a product or service by StarTech.com, or an endorsement of the product(s) to which this manual applies by the third-party company in question. StarTech.com hereby acknowledges that all trademarks, registered trademarks, service marks, and other protected names and/or symbols contained in this manual and related documents are the property of their respective holders.

Warranty Information

This product is backed by a lifetime warranty.

For further information on product warranty terms and conditions, please refer to www.startech.com/warranty.

Limitation of Liability

In no event shall the liability of StarTech.com Ltd. and StarTech.com USA LLP (or their officers, directors, employees or agents) for any damages (whether direct or indirect, special, punitive, incidental, consequential, or otherwise), loss of profits, loss of business, or any pecuniary loss, arising out of or related to the use of the product exceed the actual price paid for the product. Some states do not allow the exclusion or limitation of incidental or consequential damages. If such laws apply, the limitations or exclusions contained in this statement may not apply to you.

Warning Statements

• Do not exceed the weight capacity of this product. Overloading this product might result in injury or property damage. This product can support the following weight: Stationary = 175 lbs (80 kg).

Varningar

• Överskrid inte produktens vikt kapacitet. Överbelastning av denna produkt kan leda till skador eller skador på egendom. Denna produkt kan stödja följande vikt: stationär: 80 kg.

Avertissements

• Ne dépassez pas la capacité pondérale de ce produit. Une surcharge de ce produit peut entraîner des dommages corporels ou matériels. Ce produit peut supporter le poids suivant, stationnaire = 80 kg.

Warnhinweise

• Überschreiten Sie nicht die Tragfähigkeit dieses Produkts. Das Überladen dieses Produkts kann zu Verletzungen oder Sachschäden führen. Dieses Produkt kann das folgende Gewicht tragen: Stationär = 80 kg.

Dichiarazioni di avvertenza

• Non superare la capacità di carico massimo di questo prodotto onde evitare danni o lesioni alla proprietà. Questo prodotto e' in grado di supportare il peso riportato, Statico = 80 kg.

Mensagens de aviso

• Não exceda a capacidade de peso deste produto. Sobrecarregar este produto pode resultar em ferimentos ou danos à propriedade. Este produto pode suportar o seguinte peso: estacionário: 80 kg.

Advertencias de uso

• No exceda la capacidad de carga de este producto. El sobrecargarlo puede ocasionar lesiones y daños en propiedad. Este producto puede soportar el siguiente peso, Estacionario = 80 kg.

Waarschuwingen

• Overschrijd de maximale capaciteit van dit product niet. Overbelasting De maximale gewichtscapaciteit mag niet overschreden worden. Overbelasting kan kan letsel of schade tot gevolg hebben. Dit product kan het volgende gewicht ondersteunen, stationair = 80 kg.

注意

• 本製品で定められた最大積載重量を超えないようにして下さい。最大積載重量をオーバーした場合、怪我をする恐れや器物破損の恐れがあります。 本製品は、モニター1台あたり80 kgまで支持できます。

StarTech.com Ltd.
45 Artisans Cres
London, Ontario
N5V 5E9
Canada

StarTech.com LLP
2500 Creekside
Parkwy
Lockbourne, Ohio
43137
U.S.A.

StarTech.com Ltd.
Unit B, Pinnacle 15
Gowerton Rd,
Brackmills
Northampton
NN4 7BW
United Kingdom

FR: startech.com/fr
DE: startech.com/de
ES: startech.com/es
NL: startech.com/nl
IT: startech.com/it
JP: startech.com/jp