

Image may differ from product. See technical specification for details.

# FYJ 35 KF

Square flanged ball bearing unit with adapter sleeve locking, cast iron housing, JIS

These square flanged ball bearing units are compliant with Japanese Industrial Standards (JIS). They consist of an insert bearing, locked to the shaft with an adapter sleeve, which enables the bearings to operate at higher speeds and run more smoothly in applications where the direction of rotation is constant or alternating. The bearing is mounted in a cast iron housing,

which can be bolted to a machine wall or frame. Ball bearing units can accommodate moderate initial misalignment, but normally do not permit axial displacement. The adapter sleeve is not included in the unit and should be ordered separately.

- Resist high levels of contamination
- Designed for high temperatures and speeds
- Accommodate relatively heavy loads
- Cost-effective

# Overview

## Dimensions

| | |
|---|---|
| Attachment bolt diameter | 12 mm |
| Shaft diameter | 30 mm |
| Housing overall width | 34 mm |
| Width, total | 43.55 mm |
| Centre distance between bolt holes | 92 mm |
| Bearing width, total | 30.5 mm |

## Performance

| | |
|---|---|
| Basic dynamic load rating | 25.5 kN |
| Basic static load rating | 15.3 kN |
| Limiting speed | 5 300 r/min |

## Properties

| | |
|---|---|
| Associated mounting tool | HN 7 |
| Housing type | Flanged |
| Flanged housing type | Square |
| Number of bolt holes for fasteners | 4 |
| Fastening bolt hole type | Plain |
| Retaining feature, inner ring | Adapter sleeve |
| Bore type | Tapered |
| Rubber seating ring | Without |
| Material, housing | Cast iron |
| Material, bearing | Bearing steel |
| Coating | Without |
| Sealing, bearing | Seal and flinger on both sides |
| Sealing type | Contact, standard |
| Sealing, unit | Without |
| Lubricant | Grease |
| Relubrication hole | With |
| Grease fitting | With |

## Logistics

| | |
|---|---|
| Product net weight | 1.27 kg |
| eClass code | 23-05-16-02 |
| UNSPSC code | 31171536 |

# Technical specification

| | |
|---|---|
| Note about ordering information | Order adapter sleeve separately |
| Compliance with standard | JIS |
| Purpose specific | For material handling applications |
| Material, housing | Cast iron |
| Sealing, bearing | Seal and flinger on both sides |
| Sealing type, bearing | Contact, standard |
| Sealing, unit | Without |
| Coating | Without |

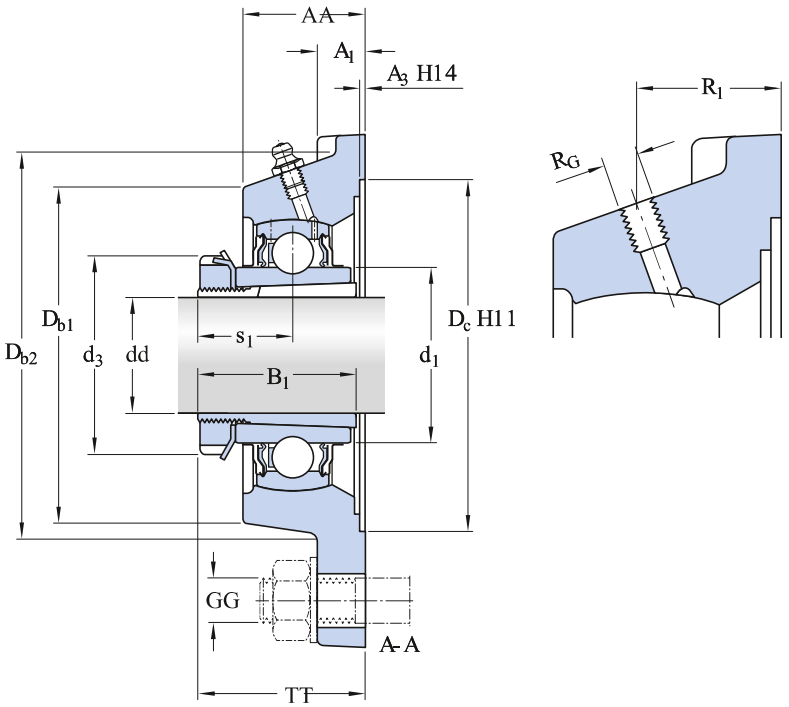

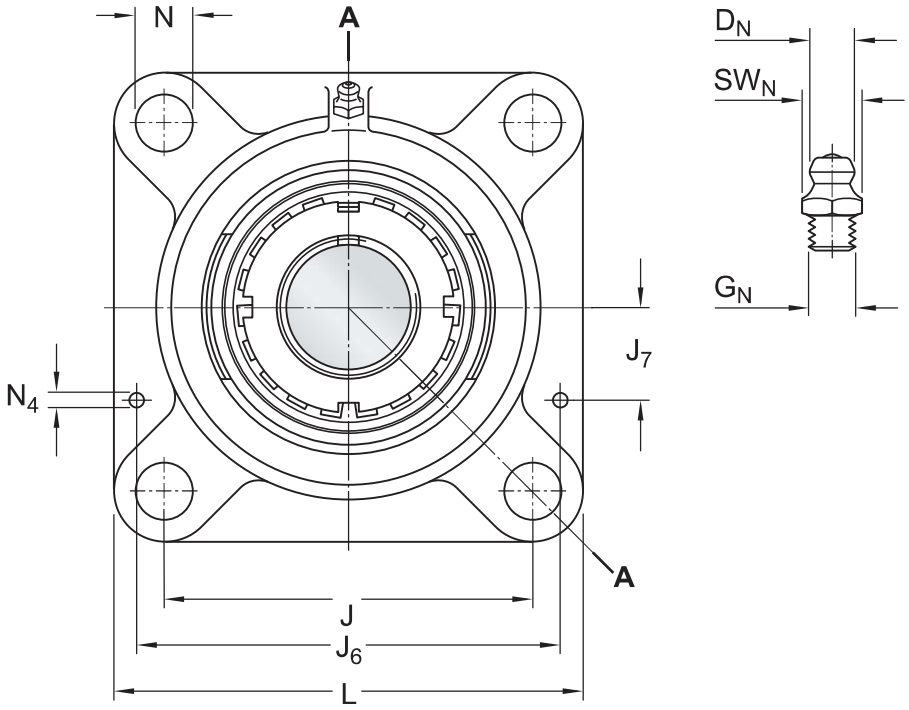


## Dimensions

| | | |
|---|---|---|
| d | 30 mm | Bore diameter |
| $d_1$ | ≈ 46.1 mm | Outer diameter of inner ring |
| $d_3$ | 52 mm | Outside diameter of lock nut |
| A | 34 mm | Width of housing |
| $A_1$ | 13 mm | Flange width |
| $A_3$ | 3.2 mm | Depth of centring recess |
| $B_1$ | 43 mm | Width of sleeve |
| $D_{b1}$ | 87 mm | Top external diameter |
| $D_{b2}$ | 96 mm | Base external diameter |
| $D_c$ | 106.4 mm | Diameter of housing centering recess |
| J | 92 mm | Centre distance between bolt holes |
| L | 118 mm | Overall length |
| N | 14 mm | Diameter of attachment bolt hole |
| $s_1$ | 24.45 mm | Distance from locking device side face to raceway centre |
| T | 43.55 mm | Overall width |
| | Value specified for $s_1$ is approximate and before the sleeve is driven into the bearing bore (sleeve and inner ring bore at starting position). | Note for B1 and s1 |

### THREADED HOLE

| | | |
|---|---|---|
| $R_G$ | 1/4-28 UNF | Housing thread for grease fitting |
| $R_1$ | 20.5 mm | Axial position of the housing thread |

### GREASE FITTING

| | | |
|---|---|---|
| $D_N$ | 6.5 mm | Diameter of head sphere of grease fitting |
| $SW_N$ | 7 mm | Hexagonal key size for the grease fitting |
| $G_N$ | 1/4-28 SAE-LT | Thread of grease fitting |

### DOWEL PINS

| | | |
|---|---|---|
| $J_6$ | 106 mm | Distance of dowel pins |
| $J_7$ | 29 mm | Axial offset of dowel pins |
| $N_4$ | 4 mm | Recommended diameter for dowel pins |

## Calculation data

| | | |
|---|---|---|
| Basic dynamic load rating | C | 25.5 kN |
| Basic static load rating | $C_0$ | 15.3 kN |
| Fatigue load limit | $P_u$ | 0.655 kN |
| Limiting speed | | 5 300 r/min |

## Mounting information

| | | |
|---|---|---|
| Associated spanner | | HN 7 |
| Recommended lock nut tightening angle | α | 100 ° |
| Recommended diameter for attachment bolts, mm | G | 12 mm |
| Recommended diameter for attachment bolts, inch | G | 0.5 in |

## Tolerances and clearances

### The values depend on the included bearing:

- Bore diameter tolerance → table 1
- Radial internal clearance → table 2
- Recommended fit → table 3
- Shaft tolerance → table 4

# Compatible products

## Component

| | |
|---|---|
| Square flanged housing for insert bearings, cast iron, JIS | FYJ 507 |
| Insert bearing with tapered bore and adapter sleeve locking | YSA 207-2FK |

## Recommended product

| | |
|---|---|
| Adapter sleeve with KM lock nut and MB lock washer, metric dimensions | H 2307 |

## More Information

### Product details

- Flanged units to ISO standards
- Flanged units to North American standards
- Flanged units to Japanese Industrial Standards (JIS)
- Flanged units, not standardized (SKF Food Line)
- Permissible misalignment
- Locating/non-locating support
- Loads
- Temperature limits
- Permissible speed
- Lubrication
- Mounting and dismounting
- Ordering information
- Designation system

### Engineering information

- Principles of ball bearing units selection and application - Download catalogue (4.9 MB)
- Principles of selecting mounted bearing solutions
- Bearing failure and how to prevent it

### Tools

- SKF Product select
- Bearing Frequency Calculator

# Terms of use

By accessing and using this website / app owned and published by AB SKF (publ.) (556007-3495 · Gothenburg) ("SKF"), you agree to the following terms and conditions:

**Warranty Disclaimer and Limitation of Liability**
Although every care has been taken to assure the accuracy of the information on this website / app, SKF provides this information "AS IS" and DISCLAIMS ALL WARRANTIES, EXPRESS OR IMPLIED, INCLUDING, BUT NOT LIMITED TO, IMPLIED WARRANTIES OF MERCHANTABILITY AND FITNESS FOR A PARTICULAR PURPOSE. You acknowledge that your use of this website / app is at your sole risk, that you assume full responsibility for all costs associated with use of this website / app, and that SKF shall not be liable for any direct, incidental, consequential, or indirect damages of any kind arising out of your access to, or use of the information or software made available on this website / app.

Any warranties and representations in this website / app for SKF products or services that you purchase or use will be subject to the agreed upon terms and conditions in the contract for such product or service.

Further, for non-SKF websites / apps that are referenced in our website / app or where a hyperlink appears, SKF makes no warranties concerning the accuracy or reliability of the information in these websites / apps and assumes no responsibility for material created or published by third parties contained therein. In addition, SKF does not warrant that this website / app or these other linked websites / apps are free from viruses or other harmful elements.

**Third Party Services**
When viewing YouTube content via the SKF website(s) (i.e. using YouTube API Services), you agree to be bound by the YouTube Terms of Service.

**Copyright**
Copyright in this website / app copyright of the information and software made available on this website / app rest with SKF or its licensors. All rights are reserved. All licensed material will reference the licensor that has granted SKF the right to use the material. The information and software made available on this website / app may not be reproduced, duplicated, copied, transferred, distributed, stored, modified, downloaded or otherwise exploited for any commercial use without the prior written approval of SKF. However, it may be reproduced, stored and downloaded for use by individuals without prior written approval of SKF. Under no circumstances may this information or software be supplied to third parties.

This website /app includes certain images used under license from Shutterstock, Inc.

**Trademarks and Patents**
All trademarks, brand names, and corporate logos displayed on the website / app are the property of SKF or its licensors, and may not be used in any way without prior written approval by SKF. All licensed trademarks published on this website / app reference the licensor that has granted SKF the right to use the trademark. Access to this website / app does not grant to the user any license under any patents owned by or licensed to SKF.

**Changes**
SKF reserves the right to make changes or additions to this website / app at any time.