PRIVACY SHROUD FOR 12 WAY K RANGE PRODUCTS

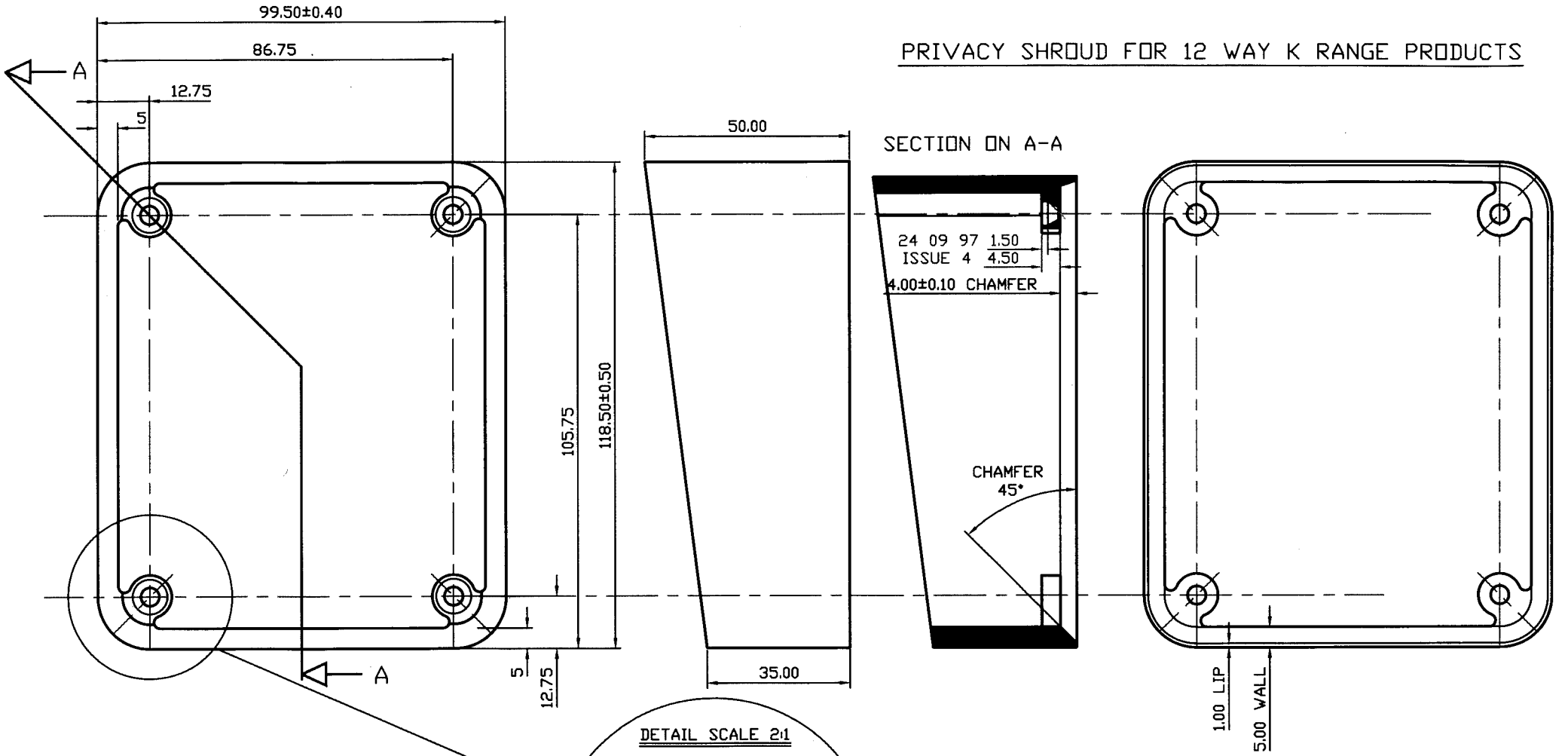

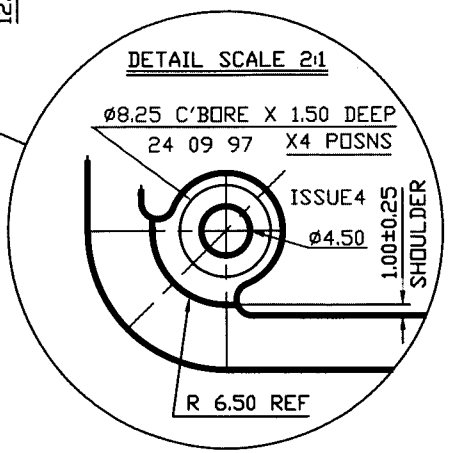

1KF50201.

GENERAL WALL SECTION 5.00mm
TOLERANCE ±0.50 ON LARGEST DIMENSION

MATERIAL - EXTRUDED ALUMINIUM.
SATIN BLACK POWDER COAT FINISH
SUITABLE FOR CONTINUOUS OUTDOOR USE
COMPONENT TO BE FREE OF FLASH, BURRS OR OTHER SURFACE DEFECTS.

VERTICAL AND PARALLEL TOLERANCE ±0.25°