

Subject to technical modification without notice. Typographical and other errors do not justify any claim for damages.
Stand: 11/98 e *Copyright © 1998 OKW Gehäusesysteme KG Germany (http://www.okw.com)*

Protection class up to IP 65 for cases type G (closed front and rear and without battery compartment) when using the sealing kit.
See pages 100-102.

new

- Shell-Type Case G (Closed front and rear) now also available with recessed operating area for membrane keyboards.

MATERIAL

High-impact polystyrene UL 94 HB).
Also available in other materials on request. Please refer to the specifications on pages 221-223.

STANDARD COLOUR

Off-white, RAL 9002.
Please refer to colour chart on page 220.

SPECIAL COLOURS

Any desired colour.

You can give your products a singular, company-specific look by choosing a special colour for the cases, e.g. your company's colours.

UP TO IP 65



Fully developed modular case system for all-purpose use.

4 plan sizes in 3 heights.

3 different cases types:

V: open front, closed rear.
O: open front, open rear.
G: closed front and closed rear.

Front panels in aluminium or red transparent PVC available as accessories for the types V and O.

Case types V and G also available with battery compartments (3 different versions).



The OKW shell-type case is a modular system with a 1001 possibilities.

This very attractive and popular range has been developed to be particularly suitable for test, measurement and control applications. A large range of accessories is available to increase the versatility of the system. Few people offer a wider range of this type of case.

BATTERY COMPARTMENTS

Range of 3 different versions.

EMC

Aluminizing by high-vacuum evaporation with excellent adhesion and extreme durability.
Aluminium contact strips available as accessories.
Starting on page 213 you will find relevant details to EMC as well as attenuation values.

MODIFICATIONS AS PER CUSTOMER'S REQUIREMENTS

Machining on modern CNC-controlled machines.
Lacquering. Silk screen and tampo printing.
See pages 216-219.

DESIGN

Matt surface, modern and aesthetic.

SIMPLE ASSEMBLY

by means of self-tapping screws.

SPECIAL ACCESSORIES

– Belt / Pocket clip
– Battery spacer
– Wall-mounting brackets
– Tilt foot bar in ABS
– Rubber feet and tilt foot bar in metal

(Description and part No. see pages 210-212.)

SHELL-TYPE CASES

Sizes 85, 110, 155 and 190



SHELL-TYPE CASE 85

Length 85 mm
Width 45 mm
Height 22 mm (type V and G)
33 / 45 mm (type G)



SHELL-TYPE CASE 110

Length 114 mm
Width 72 mm
Height 33 / 45 / 57 mm
(type V and G)



SHELL TYPE CASE 155

Length 158 mm
Width 95 mm
Height 33 / 45 / 57 mm



SHELL TYPE CASE 190

Length 190 mm
Width 138 mm
Height 45 / 68 / 91 mm

All case sizes are available in 3 heights:

Case height I

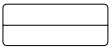

Flat top part.
Flat base part.

Case height II

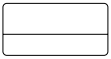

High top part.
Flat base part.

Case height III

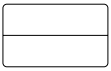

High top part.
High base part.



Battery compartment type of case size 110 for 1 flat battery 9 V (PP3). (Order battery plug-in contact separately; see page 103)





Battery compartment type of case sizes 155, 190 for 4 mignon-cells 1.5 V (AA) or 2 flat batteries 9 V (PP3). (Clips for AA cells fitted).

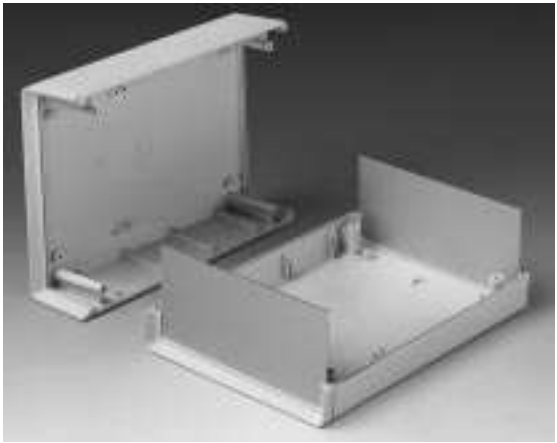



Battery compartment type of case size 155 for 1 flat battery 9 V (PP3) or 2 mignon-cells 1.5 V (AA). (Order contacts separately; see page 103)



Three different types of SHELL-TYPE CASES available:

V: Open front, closed rear.
O: Open front, open rear.
G: Closed front, closed rear.

SHELL-TYPE CASES V 85, 110, 155, 190

Open front, closed rear.

SHELL-TYPE CASES O 155, 190

Open front, open rear.

SHELL-TYPE CASES G 85, 110, 155, 190

Closed front. closed rear.

SHELL-TYPE CASES
V 85, 110, 155, 190

Open front, closed rear



VERSION I

Without battery compartment.

VERSION II

With battery compartment * for 1 x 9 V flat battery (PP3).

VERSION III

With battery compartment * for 4 x 1.5 V mignon cells (AA) or 2 x 9 V flat batteries (PP3).

VERSION IV

With battery compartment * for 1 x 9 V flat battery (PP3) or 2 mignon cells 1.5 V (AA).

Battery compartments are accessible from the outside.

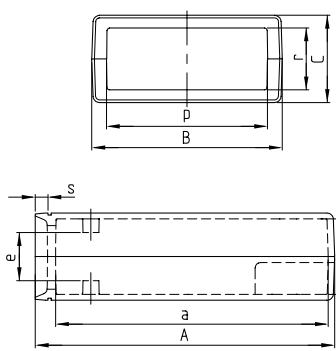

DESIGN

Two-part case with open front. Front panels in matt anodized aluminium or red transparent PVC (accessories) can be inserted into the front guide grooves.

A high degree of rigidity and tight fitting due to lateral and back tongue- and groove joint.

MATERIAL

High-impact polystyrene (UL 94 HB).
Also available in other materials on request. Please refer to the specifications on pages 221-223.

STANDARD COLOUR

Off-white, RAL 9002.
Please refer to colour chart on page 220.

SPECIAL COLOURS

Any desired colour.

Part No.	Shell-type case	Outside dim.			Inside dimensions						Spacings											Version
		A	B	C	a	b	c	d	e	f	g	h	k	l	m	n	o	p	r	s	t	
A 94 04 333	V 85	85	45	22	74	39	18	22	8	–	22	–	45	29	–	–	–	34	12	4,5	–	I
A 94 06 333	V 110	114	72	33	98	62	27	43	17	–	21	–	76	32	30	30	30	57	23	6	–	I
A 94 06 343		114	72	45	98	62	39	43	29	–	21	–	76	32	30	30	30	57	35	6	–	I
A 94 06 443		114	72	57	98	62	51	43	41	–	21	–	76	32	30	30	30	57	47	6	–	I
A 94 06 334		114	72	33	98	62	27	43	17	8	21	46	–	32	30	30	–	57	23	6	30	II
A 94 06 344		114	72	45	98	62	39	43	29	20	21	46	–	32	30	30	–	57	35	6	30	II
A 94 08 333	V 155	158	95	33	143	85	27	63	16	–	20	60	120	50	38	42	42	79	21	7	–	I
A 94 08 343		158	95	45	143	85	39	63	28	–	20	60	120	50	38	42	42	79	33	7	–	I
A 94 08 443		158	95	57	143	85	51	63	40	–	21	60	120	50	38	42	42	79	45	7	–	I
A 94 08 338		158	95	33	143	85	27	63	16	7	20	60	–	50	38	42	–	79	21	7	61	III
A 94 08 348		158	95	45	143	85	39	63	28	19	20	60	–	50	38	42	–	79	33	7	61	III
A 94 08 336		158	95	33	143	85	27	63	16	7	20	60	90	50	38	42	–	79	21	7	31	IV
A 94 08 346		158	95	45	143	85	39	63	28	19	20	60	90	50	38	42	–	79	33	7	31	IV
A 94 13 333	V 190	190	138	45	175	130	39	101	28	–	19	53	154	89	34	42	42	122	31	7	–	I
A 94 13 343		190	138	68	175	128	62	101	51	–	19	53	154	89	34	42	42	122	54	7	–	I
A 94 13 443		190	138	91	175	128	85	100	74	–	19	53	154	89	34	42	42	122	77	7	–	I
A 94 13 338		190	138	45	175	130	39	101	28	19	19	53	154	89	34	42	42	122	31	7	61	III
A 94 13 348		190	138	68	175	128	62	101	51	42	19	53	154	89	34	42	42	122	54	7	61	III

* References: The battery contact for version II and contact or clips for version IV must be separately ordered.
The AA-cell clips for version III are already supplied with the case.
For front panels see page 103.

SHELL-TYPE CASES
V 85, 110, 155, 190

Open front, closed rear.

ASSEMBLY

Case parts are assembled by means of four self-tapping screws.
Fast and easy to equip.
Guide ridges for vertical mounting of partitions and PCBs. Fastening pillars in top and base for horizontal mounting of PCBs.
Self-tapping screws for PCB fixing see page 103.



ACCESSORIES

- Contact strips to connect shielded case shells
- Front panels
- Plug-in contact
- Set of battery clips
- Small cover plates
- Rubber feet

For accessories see pages 102 und 103.

Same internal dimensions and spacings for top and base, with the exception, that the tops are without knock-out keyholes for wall-mounting.

V 85

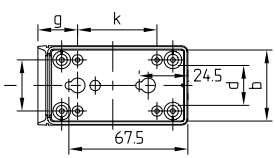

V155

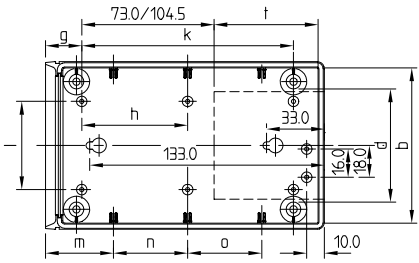

V 110

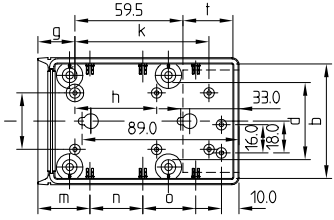

V190

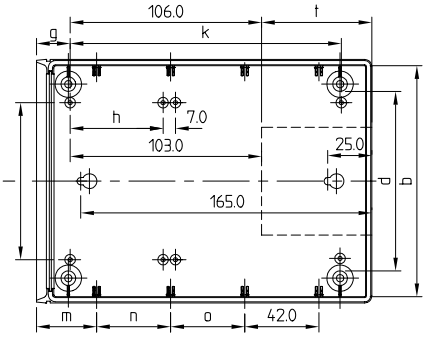

SHELL-TYPE CASES
O 155, 190

Open front, closed rear.



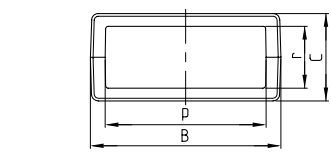

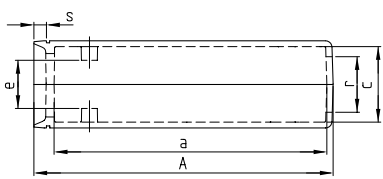

DESIGN

Two-part case with open front ond open rear. Front panels in matt anodized aluminium or red transparent PVC (accessories) can be inserted into the front / rear guide grooves.

A high degree of rigidity and tight fitting due to lateral tongue- and groove joint.

MATERIAL

High-impact polystyrene (UL 94 HB).
Also available in other materials on request. Please refer to the specifications on page 221.

STANDARD COLOUR

Off-white, RAL 9002.
Please refer to colour chart on page 220.

SPECIAL COLOURS

Any desired colour.

MODIFICATIONS AS PER CUSTOMER'S REQUIREMENTS

See pages 216-219.

VERSION I

Without battery compartment.

Part No.	Shell-type case	Outside dim.			Inside dimensions						Spacings											Version
		A	B	C	a	b	c	d	e	f	g	h	k	l	m	n	o	p	r	s	t	
A 94 08 330	O 155	158	95	33	143	85	27	63	16	–	20	60	120	50	38	42	42	79	21	6	–	I
A 94 08 340		158	95	45	143	85	39	63	28	–	20	60	120	50	38	42	42	79	33	6	–	I
A 94 08 440		158	95	57	143	85	51	63	40	–	20	60	120	50	38	42	42	79	45	6	–	I
A 94 13 330	O 190	190	138	45	174	130	39	101	28	–	19	53	154	89	34	42	42	122	31	7	–	I
A 94 13 340		190	138	68	174	128	62	101	51	–	19	53	154	89	34	42	42	122	54	7	–	I
A 94 13 440		190	138	91	174	128	85	100	74	–	19	53	154	89	34	42	42	122	77	7	–	I

SHELL-TYPE CASES
O 155, 190 Open front, open rear

ASSEMBLY

Case parts are assembled by means of four self-tapping screws.
Fast and easy to equip.
Guide ridges for vertical mounting of partitions and PCBs. Fastening pillars in top and base for horizontal mounting of PCBs.
Self-tapping screws for PCB fixing see page 103.

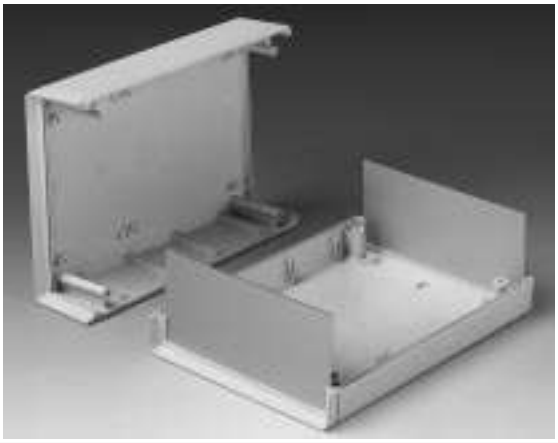

ACCESSORIES

- Contact strips to connect shielded case shells
- Front panels
- Small cover plates
- Rubber feet

For accessories see pages 102 und 103.

Same internal dimensions and spacings for top and base, with the exception, that the tops are without knock-out holes for wall-mounting.

O 155

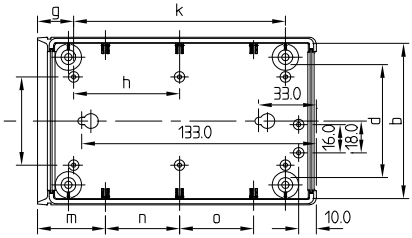

O 190

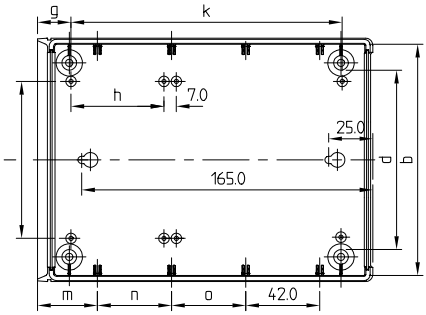

SHELL-TYPE CASES
G 85, 110, 155, 190

Closed front and rear

Protection class up to IP 65 for version I when using the sealing kit.

VERSION I

Without battery compartment.

VERSION II

With battery compartment * for 1 x 9 V flat battery (PP3).

VERSION III

With battery compartment * for 4 x 1.5 V mignon cells (AA) or 2 x 9 V flat batteries (PP3).

VERSION IV

With battery compartment * for 1 x 9 V flat battery (PP3) or 2 1.5 V mignon cells (AA).

Battery compartments are accessible from the outside.



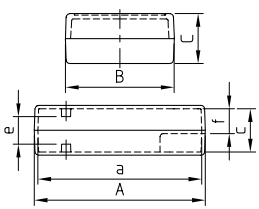

Top view with recessed area

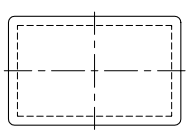

DESIGN

Two-part case with closed front and rear.

A high degree of rigidity and tight fitting due to tongue- and groove joint.

Some versions are available with a top recessed area.

MATERIAL

High-impact polystyrene (UL 94 HB).
Also available in other materials on request. Please refer to the specifications on pages 221-223.

STANDARD COLOUR

Off-white, RAL 9002.

SPECIAL COLOURS

Any desired colour.

Part No.	Shell-type case	Outside dim. A	B	C	Inside dimensions a	b	c	d	e	f	Spacings g	h	k	l	m	n	o	t	Dim. (L x W x H) recessed area	Version
A 94 04 331	G 85	85	45	22	79	39	18	22	8	–	17	–	50	29	–	–	–	–	–	I
A 94 04 341		85	45	33	78	38	29	22	20	–	17	–	50	29	–	–	–	–	–	I
A 94 04 441		85	45	45	78	38	41	22	31	–	17	–	50	29	–	–	–	–	–	I
A 94 06 331	G 110	114	72	33	104	62	27	43	17	–	21	–	76	32	30	30	30	–	–	I
A 94 06 351		114	72	33,5	104	62	27	43	17	–	21	–	76	32	30	30	30	–	102 x 60 x 1	I
A 94 06 341		114	72	45	104	62	39	43	29	–	21	–	76	32	30	30	30	–	–	I
A 94 06 441		114	72	57	104	62	51	43	41	–	21	–	76	32	30	30	30	–	–	I
A 94 06 332		114	72	33	104	62	27	43	17	8	21	46	–	32	30	30	–	30	–	II
A 94 06 352		114	72	33,5	104	62	27	43	17	8	21	46	–	32	30	30	–	30	102 x 60 x 1	II
A 94 06 342		114	72	45	104	62	39	43	29	20	21	46	–	32	30	30	–	30	–	II
A 94 08 331	G 155	158	95	33	149	85	27	63	16	–	20	60	120	50	38	42	42	–	–	I
A 94 08 351		158	95	33,5	149	85	27	63	16	–	20	60	120	50	38	42	42	–	144,5 x 81,5 x 1	I
A 94 08 341		158	95	45	149	85	39	63	28	–	20	60	120	50	38	42	42	–	–	I
A 94 08 441		158	95	57	149	85	51	63	40	–	21	60	120	50	38	42	42	–	–	I
A 94 08 337		158	95	33	149	85	27	63	16	7	20	60	–	50	38	42	–	61	–	III
A 94 08 357		158	95	33,5	149	85	27	63	16	7	20	60	–	50	38	42	–	61	144,5 x 81,5 x 1	III
A 94 08 347		158	95	45	149	85	39	63	28	19	20	60	–	50	38	42	–	61	–	III
A 94 08 335		158	95	33	149	85	27	63	16	7	20	60	90	50	38	42	–	31	–	IV
A 94 08 355		158	95	33,5	149	85	27	63	16	7	20	60	90	50	38	42	–	31	144,5 x 81,5 x 1	IV
A 94 08 345		158	95	45	149	85	39	63	28	19	20	60	90	50	38	42	–	31	–	IV
A 94 13 331	G 190	190	138	45	182	130	39	101	28	–	19	53	154	89	34	42	42	–	–	I
A 94 13 351		190	138	45,5	182	130	39	101	28	–	19	53	154	89	34	42	42	–	172 x 120 x 1	I
A 94 13 341		190	138	68	180	128	62	101	51	–	19	53	154	89	34	42	42	–	–	I
A 94 13 441		190	138	91	180	128	85	100	74	–	19	53	154	89	34	42	42	–	–	I
A 94 13 337		190	138	45	182	130	39	101	28	19	19	53	154	89	34	42	42	61	–	III
A 94 13 357		190	138	45,5	182	130	39	101	28	19	19	53	154	89	34	42	42	61	172 x 120 x 1	III
A 94 13 347		190	138	68	180	128	62	101	51	42	19	53	154	89	34	42	42	61	–	III

* References: The battery contact for version II and contact or clips for version IV must be separately ordered – see on page 103.
The AA-cell clips for version III are already supplied with the case.

SHELL-TYPE CASES
G 85, 110, 155, 190 Closed front and rear

ASSEMBLY

Case parts are assembled by means of four self-tapping screws.
Fast and easy to equip.
Guide ridges for vertical mounting of partitions and PCBs. Fastening pillars in top and base for horizontal mounting of PCBs.
Self-tapping screws for PCB fixing see page 103.



ACCESSORIES

- Contact strips to connect shielded case shells
- Sealing kit
- Plug-in contact
- Set of battery clips
- Small cover plates
- Rubber feet

For accessories see pages 102 and 103.

Same internal dimensions and spacings for top and base, with the exception, that the tops are without knock-out holes for wall-mounting.

G 85

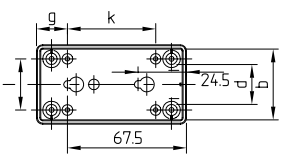

G 155

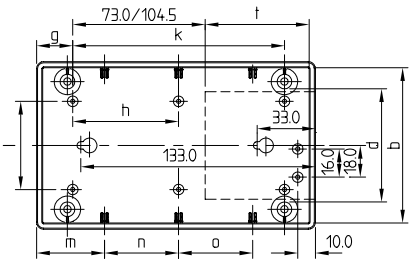

G 110

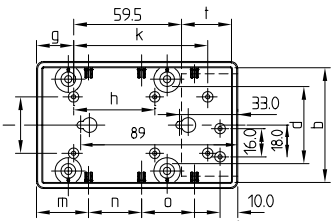

G 190

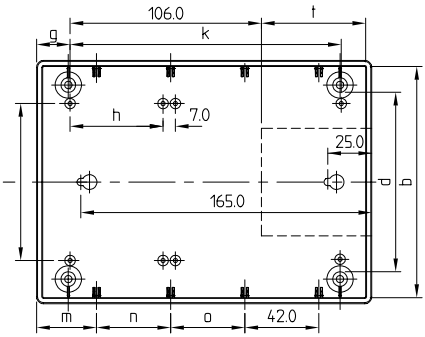

SHELL-TYPE CASES ACCESSORIES

SEALING KIT

Protection class up to **IP 65** for cases type G (closed front and rear and without battery compartment).

Inlay O-ring and four rubber disks seal the tongue and groove joint and the four assembly pillars.

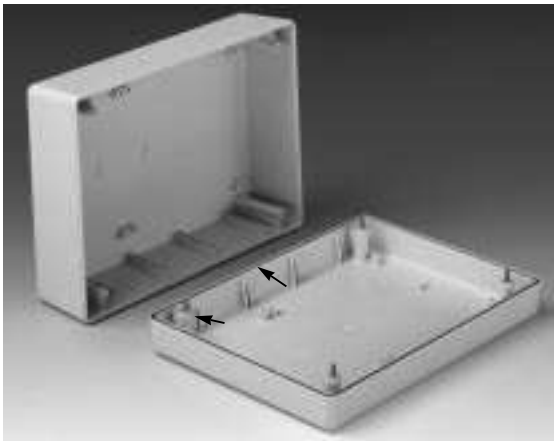

Part No.	Sealing kit for case	Supply / Application
A 91 04 250	G 85	O-ring for the case
A 91 06 352	G 110	4 rubber disks for sealing between the assembly pillars
A 91 08 486	G 155	
A 91 13 630	G 190	

CONTACT-STRIPS

Aluminium strips which provide additional electrical continuity between the top and base shells of shielded cases (Order two pieces, one for each side).

Easy assembly. Strips simply clip into guide grooves moulded into the inner side-walls of the SHELL-TYPE CASES.

Starting on page 213 you will find relevant details to EMC as well as attenuation values.



Part No.	Contact strips for case	Supply / Application
A 91 04 073	V, G 85	1 contact strip to connect shielded case shells
A 91 06 095	V, G 110	
A 91 08 120	V, O, G 155	
A 91 13 150	V, O, G 190	

SHELL-TYPE CASES V:

Open front.
Closed rear.

SHELL-TYPE CASES O:

Open front.
Open rear.

SHELL-TYPE CASES G:

Closed front.
Closed rear.

FRONT PANELS

for SHELL-TYPE CASES V and O.

Available in aluminium or red transparent PVC.

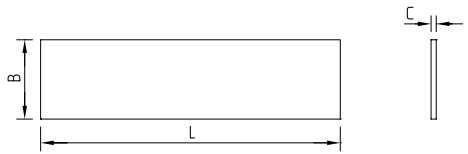

Measures in mm L	B	C	For cases	Aluminium Part No.	Red transparent PVC Part No.
35,5	14,4	1	A 94 04 33.	A 91 04 111	A 91 04 112
58,8	25,4	1	A 94 06 33.	A 91 07 111	A 91 07 112
58,8	37,4	1	A 94 06 34.	A 91 07 121	A 91 07 122
58,8	49,4	1	A 94 06 44.	A 91 07 221	A 91 07 222
81,5	23,6	1	A 94 08 33.	A 91 09 111	A 91 09 112
81,5	35,6	1	A 94 08 34.	A 91 09 121	A 91 09 122
81,5	47,6	1	A 94 08 44.	A 91 09 221	A 91 09 222
124,2	33,6	1,5	A 94 13 33.	A 91 14 111	A 91 14 112
124,2	56,6	1,5	A 94 13 34.	A 91 14 121	A 91 14 122
124,2	79,6	1,5	A 94 13 44.	A 91 14 221	A 91 14 222



Specially designed for plastics. Cross-slotted screwhead.

SELF-TAPPING SCREWS FOR MOUNTING PCB'S

Version	Part No.
3 x 6 mm	A 03 06 031
3 x 8 mm	A 03 08 031



PLUG-IN CONTACT FOR PP3

Application	Colour	Part No.
for 1 x 9 V flat battery	blue	A 91 60 003



SET OF BATTERY CLIPS FOR 2 x AA

Version / Application	Part No.
Set for 2 x 1.5 V mignon cells	A 91 94 001



SMALL COVER PLATES

With self-adhesive foil. For flush concealment of case fixing screws.

Dim. in mm ø	Height	For case	Colour	Part No.
7	1,5	85, 110	grey	A 92 07 158
10	1,5	155, 190	grey	A 92 10 158



RUBBER FEET

With self-adhesive foil.

Dim. in mm ø	Height	For case	Colour	Part No.
7	3	85, 110	black	A 92 07 300
10	3	155, 190	black	A 92 10 300

For additional accessories see pages 208-212.

CONTROLLER CASE

Particularly suitable for controllers and thermostats.

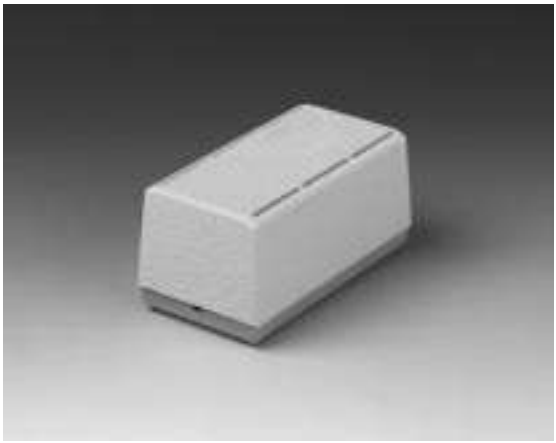

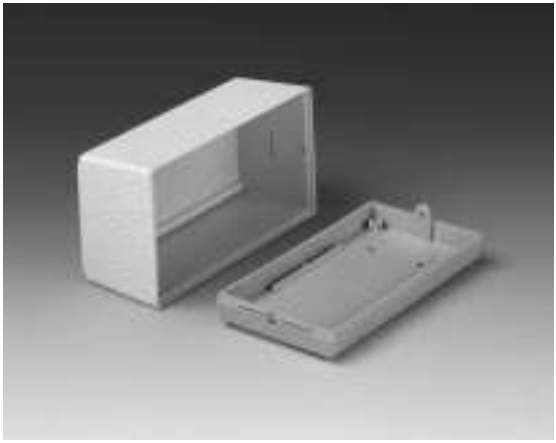

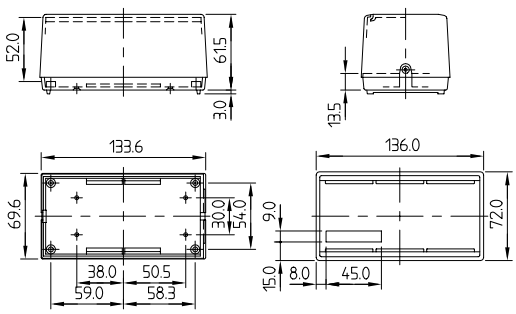

DESIGN

Two-part case with heavy textured surface. Recessed area in the cover e.g. for your logo. Particularly suitable for wall-mounting because the cover and base are fixed together from the side with only one screw.

Covered space louvres in the top and base.

Slot for cable grommets on one side of the base.

ASSEMBLY

Fast assembly and easy to equip. Internal fastening pillars for PCBs.

MATERIAL

High-impact polystyrene (UL 94 HB).
Also available in other materials on request. Please refer to the specifications on pages 221-223.

STANDARD COLOURS

Top off-white, RAL 9002.
base pebble grey, RAL 7032.
Please refer to colour chart on page 220.

SPECIAL COLOURS

Any desired colours.

MODIFICATIONS AS PER CUSTOMER'S REQUIREMENTS

See page 216-219.

Part No.	Outside dimensions in mm		
	L	W	H
A 90 90 065	136	72	62