LCD Monitor Arm

Fitting Check-List

01	Small Screw	4pcs
02	Long Screw	4pcs
03	Cable Holder	1pcs
04	Cable Tie	3pcs
05	Wrench	1pcs



Arm Operation

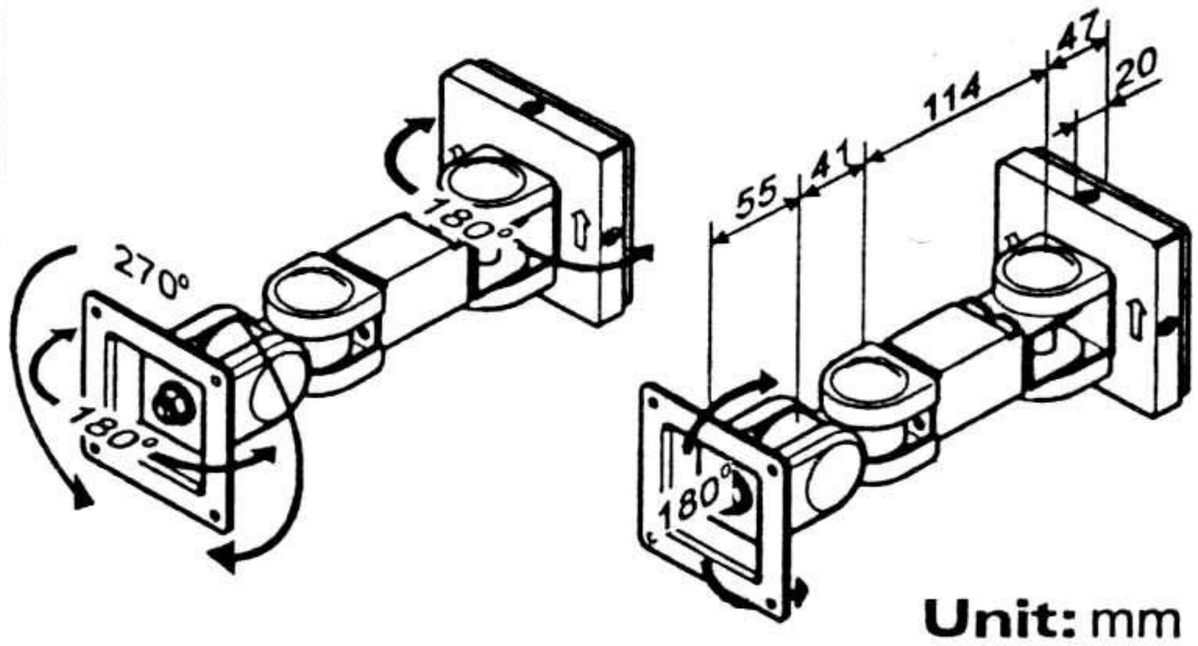

Unit: mm

Assembly Guide

a.

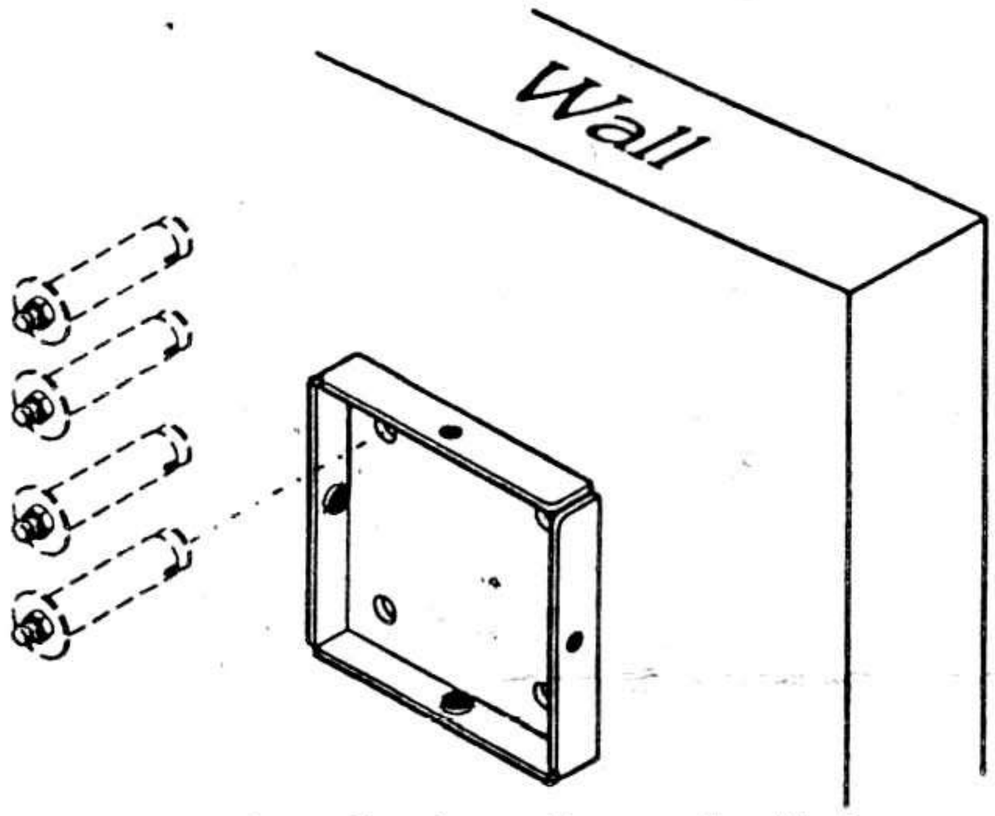

Secure bottom plate firmly to the wall with four expansion screws (not supplied).

b. 01 x4

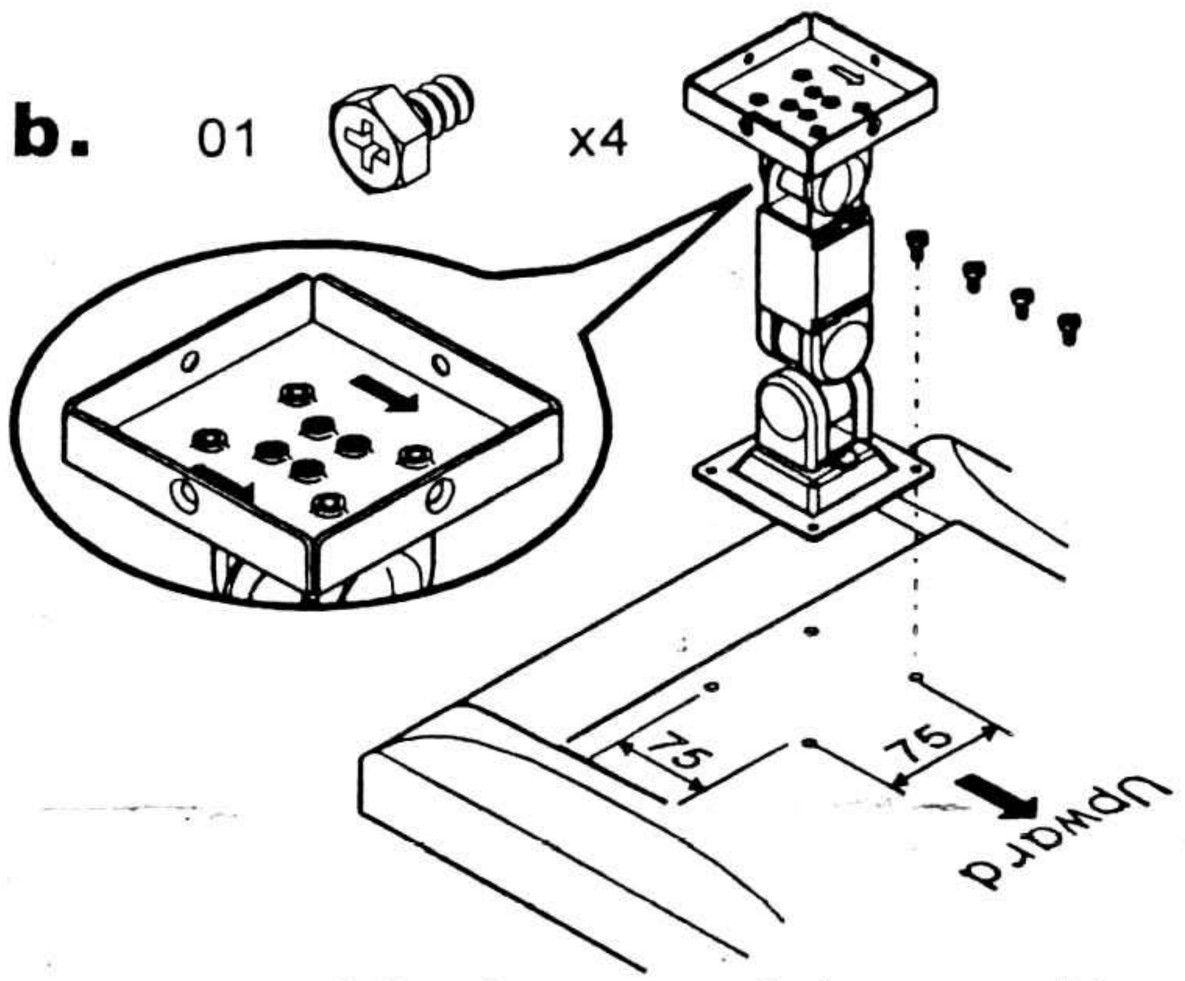

Make sure of direction correct during assembly. (as illustrated)

c. 02 x4

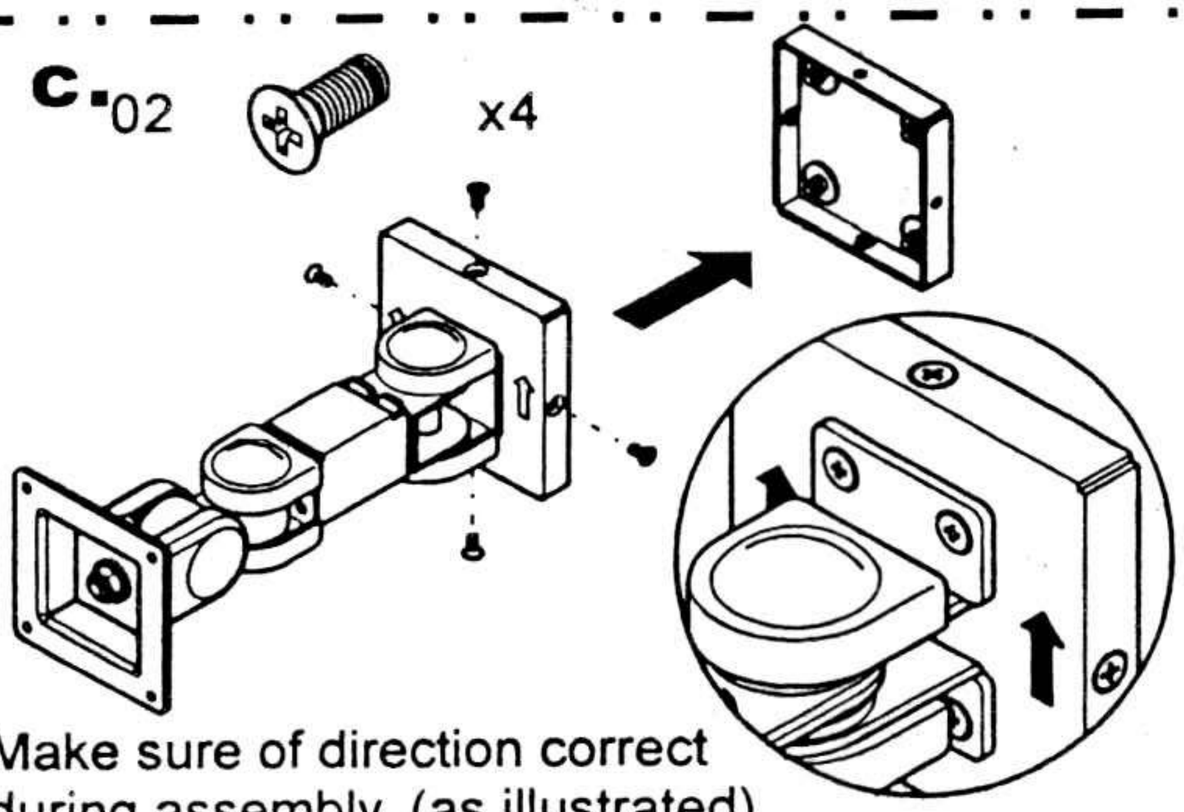

Make sure of direction correct during assembly. (as illustrated)

d.

03 x1 04 x3



Use cable holder 03 & cable tie 04 supplied to finish cable management.

Caution:

- Standard product fit VESA interface 75*75mm, if need VESA interface plate 100*100mm, please consult with the store you purchased.
- Before assembling, please check assembly guide thoroughly to avoid any mistake.
- Weight capacity for 3-6kgs LCD monitors.
- Standard products include several small parts, keep out of children when assemble this product and prevent children from swallowing them.
- Do not put your fingers on the joint during arm moving to prevent from clipping.

LA-18

Adjusting Universal Joint Tension

When assembling the arm with monitors of differing weights, you may find that the tension of the universal joint needs to be adjusted to ease movement or to maintain the desired monitor position. If so, adjust as follows:

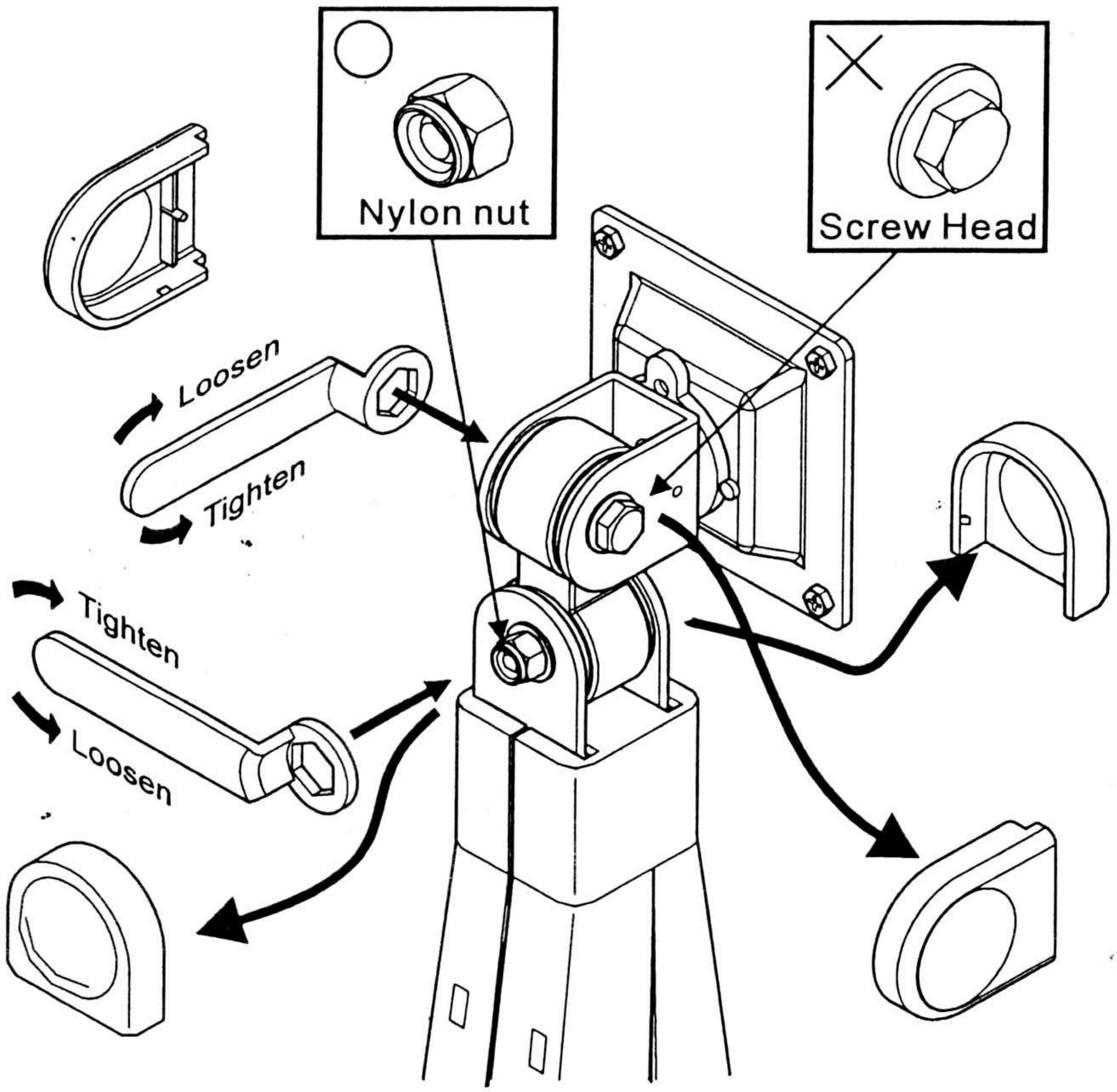

a. Remove the four plastic universal joint covers
b. Find the nylon nut (not the screw head) and use the included wrench to adjust the tension.
c. Use one hand to support the monitor and adjust the tension of the universal joint.
   - Clockwise : more tension
   - Counterclockwise : less tension
d. When the desired tension is achieved, replace the four plastic covers.

Caution:

- **Support the monitor during the adjustment procedure.**
- **Only adjust the nylon nut (not the screw head).**
- **Do not disassemble the universal joint .**