KST Series
Long Travel Tact Switch for SMT

Features/Benefits

- ***Rubber actuator***
- ***Silver contact material***
- ***J or G terminals***
- ***Compatible with pick and place machines***
- ***IP 40 sealed***
- ***RoHS compliant and compatible***

Typical Applications

- ***Front panel***
- ***Car dashboards***
- ***Telephone set***
- ***Instrumentation***



Specification

FUNCTION: Momentary
CONTACT ARRANGEMENT: 1 make contact = SPST N.O.
TERMINALS: J Bend or Gullwing type for SMT

Mechanical

MAXIMUM APPLIED FORCE: 4 kg (4078gf)*
* Valid one time. Maximum allowed travel to avoid overload issues is 1.75mm

Type	Operating force Fa N (grams)±30%	Operating life (operations)	Travel to make
KST221G / J	1,6-3,2	100,000	1,3+0,3/-0.2
KST241G / J	2,45-4,55	100,000	1,3+0,3/-0.2

Packaging

Switches are delivered on continuous tape and reels of 1,000 pieces, 330 (12.992) external diameter. Other dimensions according to IEC 60286-3.

This data sheet does not provide enough information for applications which require a certain level of quality or safety such as automotive, medical systems, safety equipment. Please contact your sales representative to get contractual specification package.

Electrical

	Silver	Gold
SWITCHING POWER MAX.:	1.0 VA	0.50 VA
MAXIMUM POWER:	1.0 VA	0.2 VA
MAXIMUM VOLTAGE:	32 VDC	32 VDC
MINIMUM VOLTAGE:	20 mV	20 mV
MAXIMUM CURRENT:	50 mA	10 mA
MINIMUM CURRENT:	1 mA	1 mA

DIELECTRIC STRENGTH: ≥ 250 Vrms
CONTACT RESISTANCE: < 100mΩ
INSULATION RESISTANCE: Initial measurement: ≥ 1GΩ
After damp heat: ≥ 10MΩ
BOUNCE TIME: < 5 ms

Environmental

OPERATING TEMPERATURE: -40˚C to +85˚C (Silver)
-40˚C to +125˚C (Gold)

STORAGE TEMPERATURE: -40˚C to +85˚C (Silver)
-40˚C to +125˚C (Gold)

Process

Compatible with the lead free reflow soldering process.

NOTE: Specifications listed above are for switches with standard options.
For information on specific and custom switches, consult Customer Service Center.

How To Order

Our easy build-a-switch concept allows you to mix and match options to create the switch you need. To order, select desired option from each category and and place it in the appropriate box.

However, please note that all the combinations of these options are not feasible.
For any part number different from those listed above, please consult your local representative.

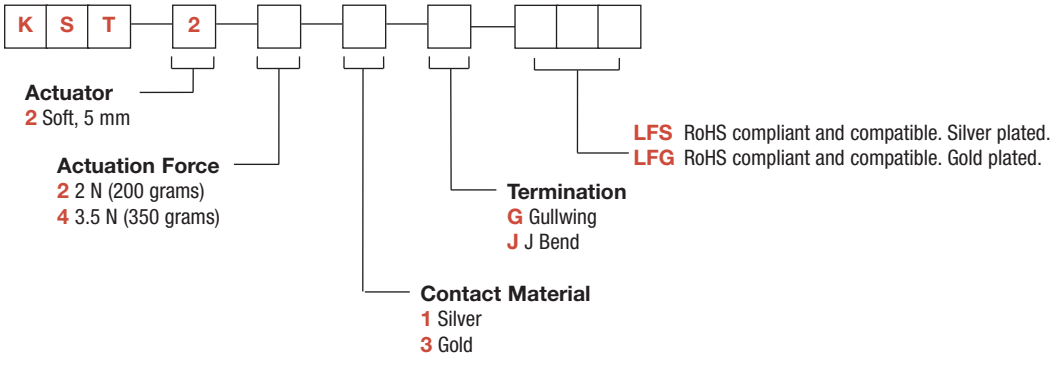

J J BEND

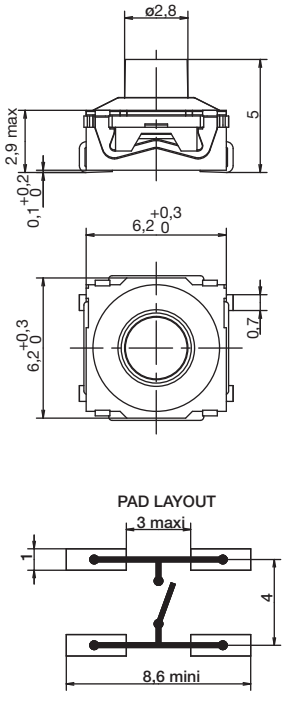

G GULLWING

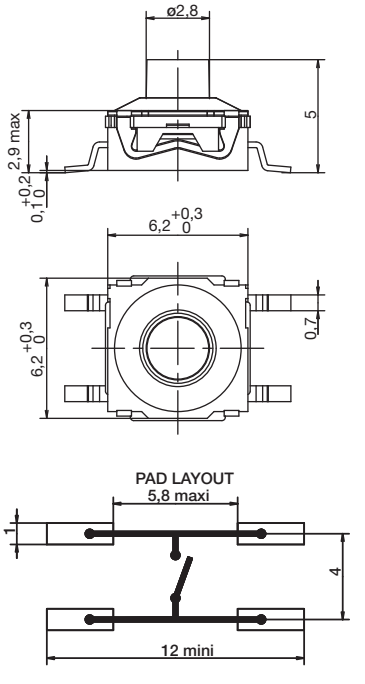

TAPE & REEL

FOR J TERMINATION

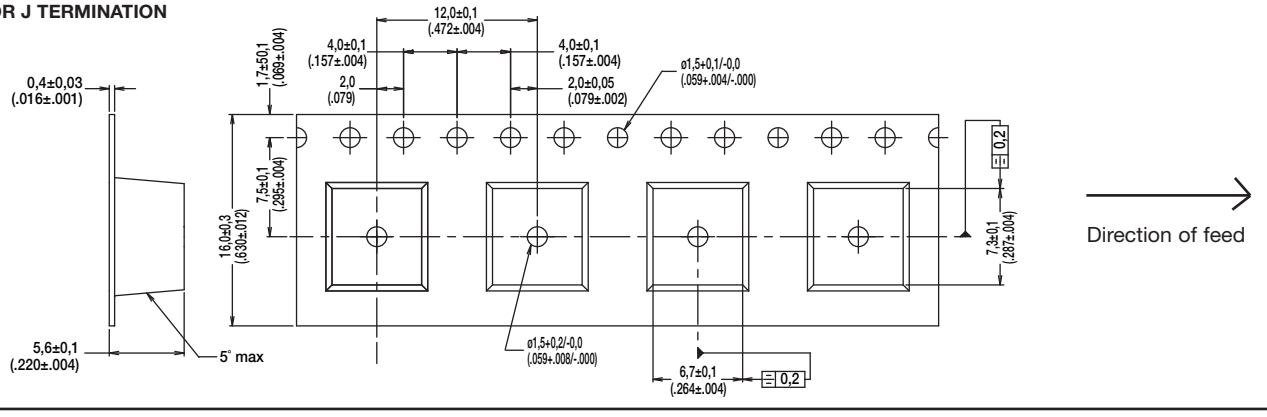

FOR G TERMINATION

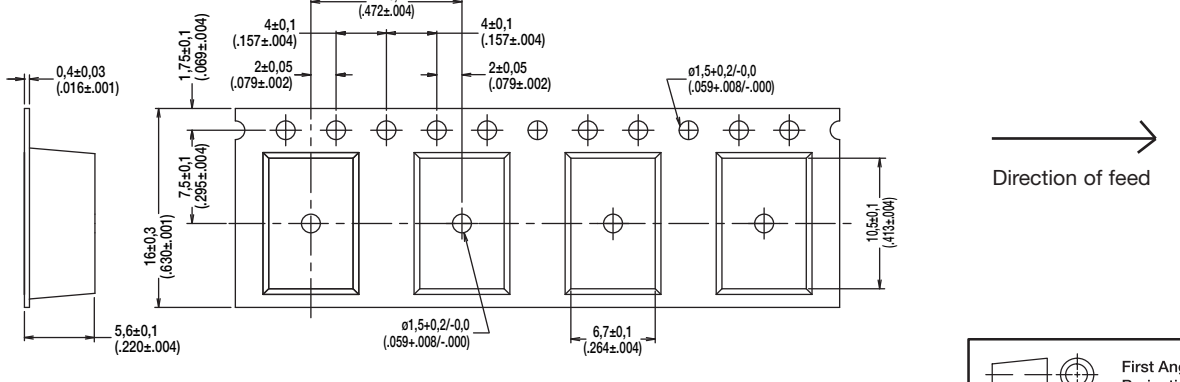

First Angle Projection

Dimensions are shown: mm (inches)
Specifications and dimensions subject to change