# Air preparation unit, 2-part, Series AS5-ACD

**R412009307**



## AVENTICS Series AS5 Air Preparation Units

The AVENTICS Series AS5 is a modular, versatile maintenance unit for universal application. This Series offers compact dimensions, is highly efficient, lightweight and easy-to-use. The AVENTICS Series AS guarantees reliability, safety, and efficiency with a simplified assembly and maintenance efforts.




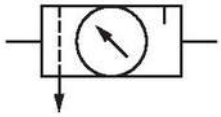

## Technical data

| | |
|---|---|
| Industry | Industrial |
| Parts | Air preparation units |
| Components | Filter pressure regulator<br>Lubricator |
| Reservoir | reservoir, polycarbonate, with PA protective guard |
| Port | G 1 |
| Nominal flow Qn | 12300 l/min |
| Filter porosity | 5 µm |
| Condensate drain | semi-automatic, open without pressure |
| Pressure gauge | with pressure gauge |
| Min. working pressure | 1.5 bar |
| Max. working pressure | 16 bar |
| Min. ambient temperature | -10 °C |
| Max. ambient temperature | 50 °C |
| Min. regulation range | 0.5 bar |
| Max. regulation range | 8 bar |
| Lock type | for padlocks |
| Type | 2-part |
| Type | Can be assembled into blocks |

| | |
|---|---|
| Pressure supply | single |
| Mounting orientation | vertical |
| Regulator type | Diaphragm-type pressure regulator |
| Regulator function | with relieving air exhaust |
| Filter element | exchangeable |
| Filter reservoir volume | 87 cm³ |
| Max. achievable compressed air class acc. to ISO 8573-1:2010 | 6 : 7 : - |
| Lubricator reservoir volume | 181 cm³ |
| Type of filling | Semi-automatic oil filling during operation<br>Manual oil filling |
| Medium | Compressed air<br>Neutral gases |
| Weight | 1.83 kg |

## Material

| | |
|---|---|
| Housing material | Polyamide |
| Seal material | Acrylonitrile butadiene rubber |
| Material front plate | Acrylonitrile butadiene styrene |
| Material threaded bushing | Die cast zinc |
| Material reservoir | Polycarbonate |
| Material protective guard | Polyamide |
| Material filter insert | Polyethylene |
| Part No. | R412009307 |

## Technical information

The pressure dew point must be at least 15 °C less than ambient and medium temperature and may not exceed 3 °C.

Note: Polycarbonate reservoirs are susceptible to solvents, supplementary information can be found at "Customer information".

Nominal flow Qn with secondary pressure p2 = 6 bar at Δp = 1 bar

A change in the flow direction (from air supply on the left to air supply on the right) occurs by rotating installation by 180° about the vertical axis. Please see the operating instructions for further details.

Also suitable for separation of fluid oil or water due to the design.

# Air preparation unit, 2-part, Series AS5-ACD

R412009307



## Dimensions

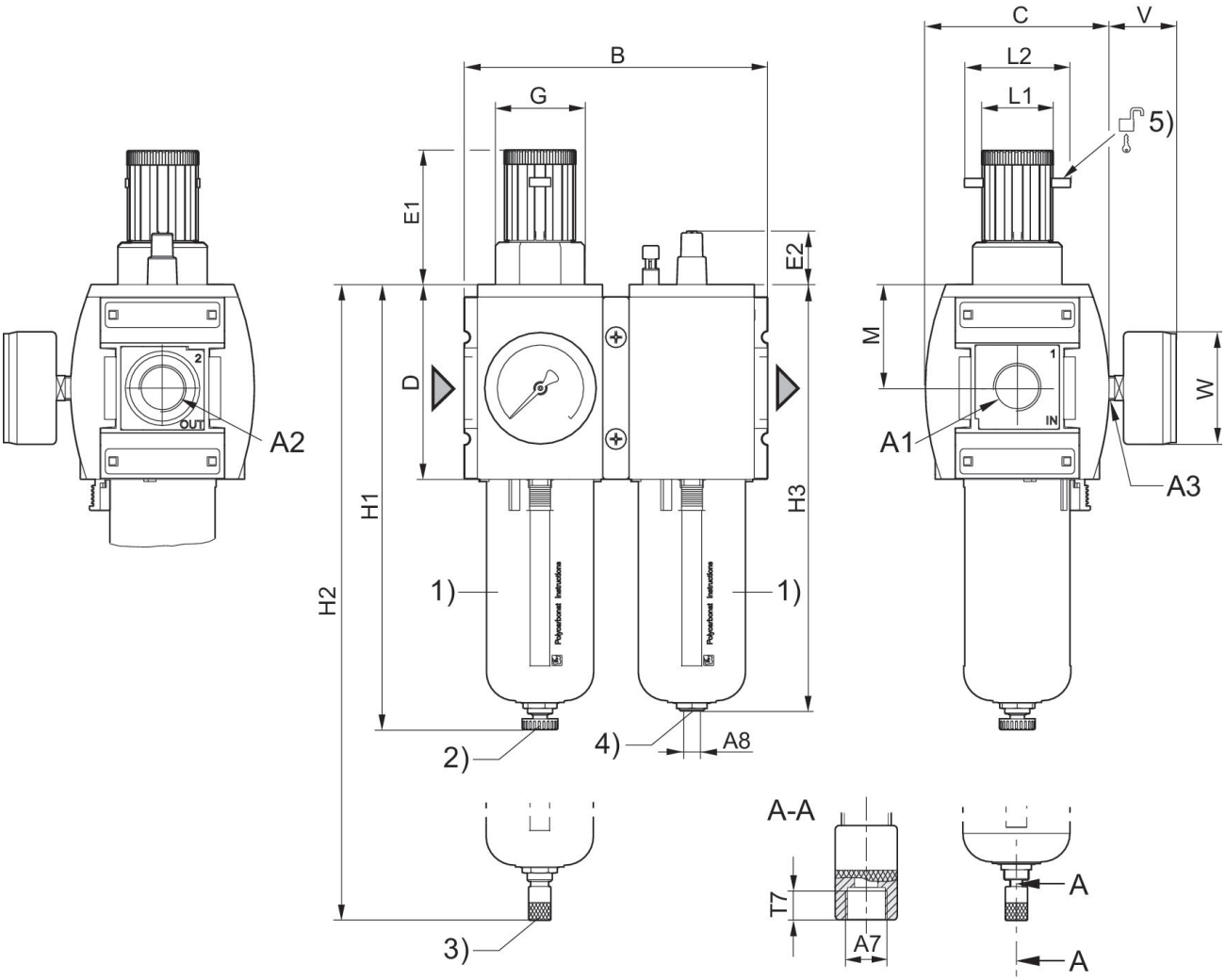


A1 = input A2 = output A3 = pressure gauge connection
A7 = condensate drain
1) Plastic reservoir and protective guard with window
2) Semi-automatic condensate drain
3) Fully automatic condensate drain
4) Port for semi-automatic oil filling
5) Mounting option for padlocks, max. shackle Ø 8

## Dimensions in mm

| Part No. | A1 | A2 | A3 | A7 | A8 | B | C | D | E1 |
|---|---|---|---|---|---|---|---|---|---|
| R412009298 | G 3/4 | G 3/4 | G 1/4 | G 1/8 | G 1/8 | 170 | 103 | 109 | 75 |
| R412009299 | G 3/4 | G 3/4 | G 1/4 | G 1/8 | G 1/8 | 170 | 103 | 109 | 75 |
| R412009307 | G 1 | G 1 | G 1/4 | G 1/8 | G 1/8 | 170 | 103 | 109 | 75 |
| R412009308 | G 1 | G 1 | G 1/4 | G 1/8 | G 1/8 | 170 | 103 | 109 | 75 |
| R412009309 | G 1 | G 1 | G 1/4 | G 1/8 | G 1/8 | 170 | 103 | 109 | 75 |

| Part No. | E2 | G | H1 | H2 | H3 | L1 | L2 | M | T7 |
|---|---|---|---|---|---|---|---|---|---|
| R412009298 | 30.5 | M50x1,5 | 250 | 266 | 239 | 41 | 60 | 58 | 8.5 |

| Part No. | E2 | G | H1 | H2 | H3 | L1 | L2 | M | T7 |
|---|---|---|---|---|---|---|---|---|---|
| R412009299 | 30.5 | M50x1,5 | 250 | 266 | 239 | 41 | 60 | 58 | 8.5 |
| R412009307 | 30.5 | M50x1,5 | 250 | 266 | 239 | 41 | 60 | 58 | 8.5 |
| R412009308 | 30.5 | M50x1,5 | 250 | 266 | 239 | 41 | 60 | 58 | 8.5 |
| R412009309 | 30.5 | M50x1,5 | 250 | 266 | 239 | 41 | 60 | 58 | 8.5 |

| Part No. | V | W |
|---|---|---|
| R412009298 | 38 | 63 |
| R412009299 | 38 | 63 |
| R412009307 | 38 | 63 |
| R412009308 | 38 | 63 |
| R412009309 | 38 | 63 |

## Flow rate characteristic (setting range p2: 0.5 - 8 bar)

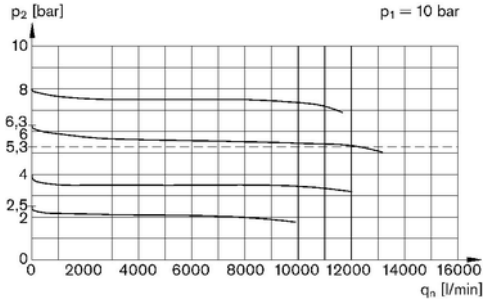


p1 = Working pressure p2 = Secondary pressure qn = Nominal flow

## Lubricator activation margin

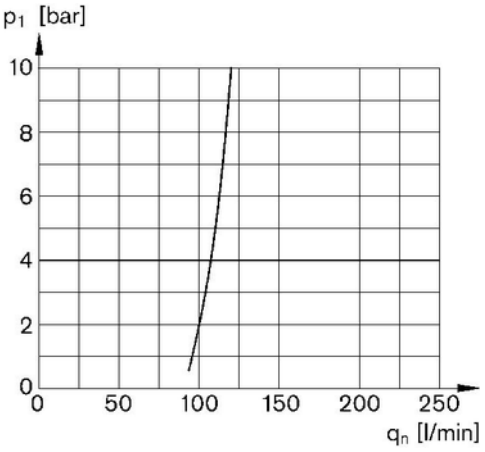


p1 = working pressure qn = nominal flow

# Air preparation unit, 2-part, Series AS5-ACD

R412009307

## Accessories overview

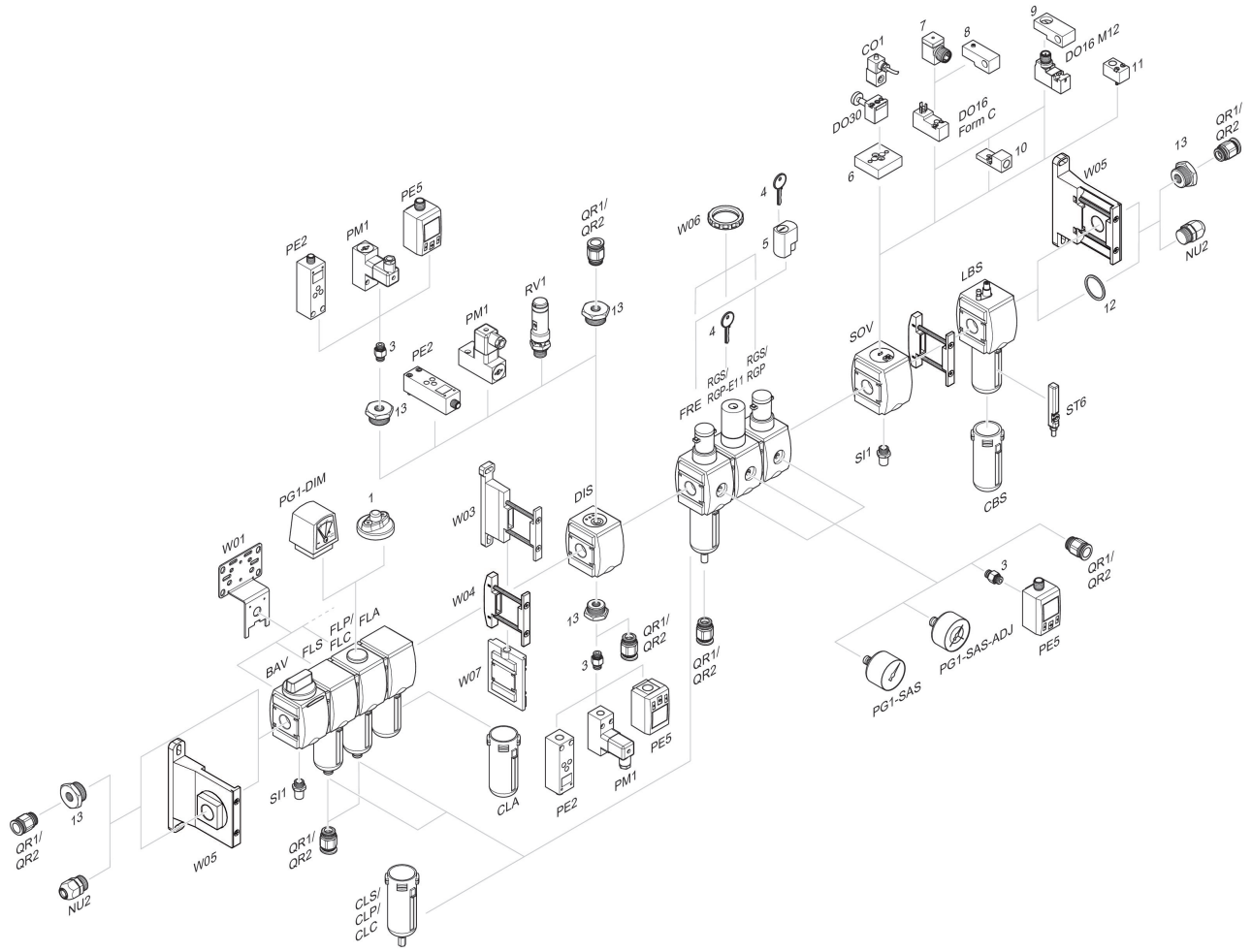


1 = contamination display 3 = Double nipple 4 = Key for E11 locking 5 = mortise lock 6 = Transition plate DO30 7 = Adapter, Series CON-VP 8 = Mounting aid DO16, form C 9 = Mounting aid DO16, M12 10 = Adapter for external pilot air 11 = Adapter pneumatic operation 12 = Sealing ring 13 = Reducing nipple