LT3022

Electronic level and temperature sensor

LT0264B-B-00KLPKG/US

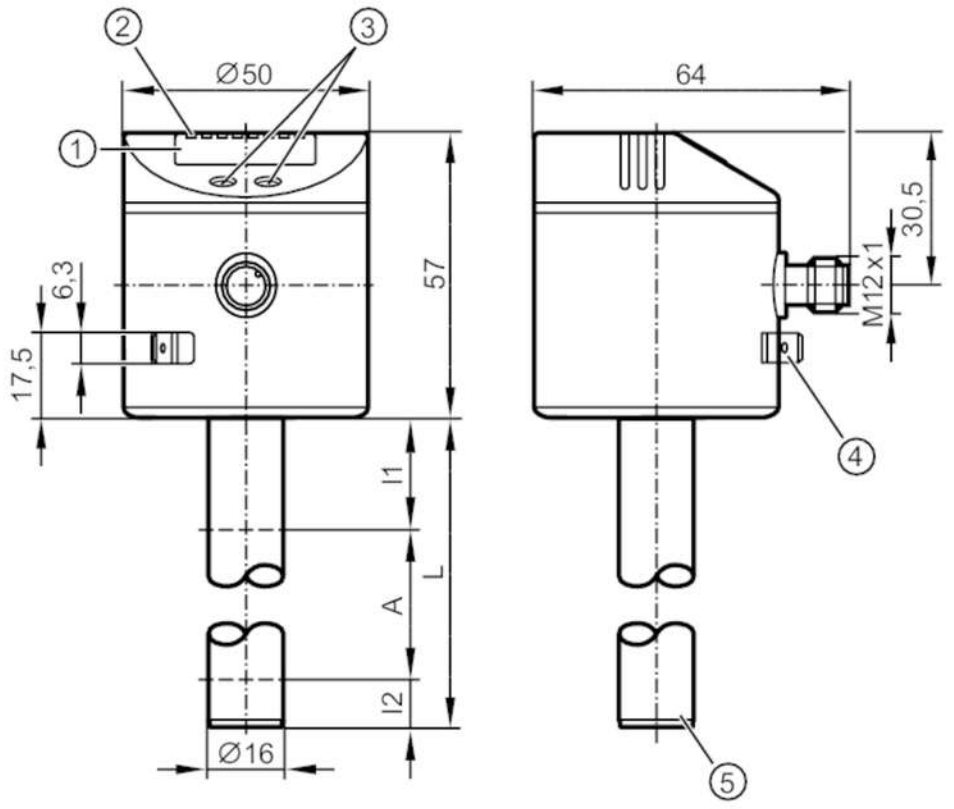

1 alphanumeric display 4-digit
2 status LEDs
3 programming buttons
4 housing connection flat-pin connector 6.3 mm DIN 46244
5 position of the temperature measuring element

Product characteristics			
Number of inputs and outputs		Number of digital outputs: 1; Number of analogue outputs: 1	
Factory setting		mineral oils	
Probe length L	[mm]	264	
Application			
Media		hydrous coolants; oils; oil-based media; water; media similar to water	
Dielectric constant of the medium		> 2	
Cannot be used for		extremely conductive media; adhering media; granulates; bulk material; acids; alkali	
Tank pressure		0.5; (when mounting with mounting accessories: E43001 - E43007, E43019) bar	0.05; (when mounting with mounting accessories: E43001 - E43007, E43019) MPa
Coolants			
Medium temperature	[°C]	0...35; (with climatic tube E43100 35...65 °C)	
Oil			
Medium temperature	[°C]	0...70	
Medium temperature short time	[°C]	0...90; (< 1 h)	
Water			
Medium temperature	[°C]	0...35; (with climatic tube E43100 35...65 °C)	

LT3022

Electronic level and temperature sensor

LT0264B-B-00KLPKG/US

Electrical data		
Operating voltage	[V]	18...30 DC
Current consumption	[mA]	< 50
Protection class		III
Reverse polarity protection		yes
Power-on delay time	[s]	< 3
Inputs / outputs		
Number of inputs and outputs		Number of digital outputs: 1; Number of analogue outputs: 1
Outputs		
Total number of outputs		2
Output signal		switching signal; analogue signal; IO-Link
Electrical design		PNP/NPN
Number of digital outputs		1
Output function		normally open / normally closed; (parameterisable)
Max. voltage drop switching output DC	[V]	2.5
Permanent current rating of switching output DC	[mA]	200
Number of analogue outputs		1
Analogue current output	[mA]	4...20, invertible
Max. load	[Ω]	500
Analogue voltage output	[V]	0...10, invertible
Min. load resistance	[Ω]	2000
Short-circuit protection		yes
Type of short-circuit protection		thermal, pulsed
Overload protection		yes
Measuring/setting range		
Factory setting		mineral oils
Probe length L	[mm]	264
Active range A	[mm]	195
Inactive range I1 / I2	[mm]	53 / 16
Setting range		
Set point SP	[mm]	25...200
Reset point rP	[mm]	20...195
In steps of	[mm]	5
Reference point OP	[mm]	69 - 82 - 94 - 106 - 118 - 130 - 143 - 155 - 167 - 179 - 191 - 204 - OFF
Hysteresis, OP	[mm]	2
Temperature monitoring		
Measuring range	[°C]	-20...90
Set point SP	[°C]	-19.5...90
Reset point rP	[°C]	-20...89.5
In steps of	[°C]	0.5

LT3022

Electronic level and temperature sensor

LT0264B-B-00KLPKG/US

Resolution of switching output	[K]	0.5	
Accuracy / deviations			
Measuring error [% of the final value]		± 5	
Repeatability		± 2	
Resolution	[mm]	5	
Zero signal (voltage)	[V]	0	
Zero signal (current)	[mA]	4.0	
Full signal (voltage)	[V]	10	
Full signal (current)	[mA]	20	
Temperature monitoring			
Switch point accuracy	[K]	± 1,5	
Resolution	[K]	0.5	
Dynamic response T09	[s]	90	
Software / programming			
Parameter setting options		hysteresis / window; normally open / normally closed; switching logic; current/voltage output; SP/rP position; adjustment OP; medium selection; offset setting; switch-on/switch-off delay	
Interfaces			
Communication interface		IO-Link	
Transmission type		COM2 (38,4 kBaud)	
IO-Link revision		1.1	
SDCI standard		IEC 61131-9	
Profiles		Smart Sensor: Process Data Variable; Device Identification, Device Diagnosis	
SIO mode		yes	
Required master port type		A	
Process data analogue		4	
Process data binary		1	
Min. process cycle time	[ms]	4.5	
Supported DeviceIDs		**Type of operation**	**DeviceID**
		default	646
Operating conditions			
Ambient temperature	[°C]	0...60	
Storage temperature	[°C]	-25...80	
Protection		IP 67	
Tests / approvals			
EMC		DIN EN 61000-6-2	
		DIN EN 61000-6-4	
Shock resistance		DIN EN 60068-2-27	15 g (11 ms)
Vibration resistance		DIN EN 60068-2-6	5 g (10...2000 Hz)
MTTF	[years]	222	
UL approval		UL Approval no.	H002
Mechanical data			
Weight	[g]	290	

LT3022

Electronic level and temperature sensor

LT0264B-B-00KLPKG/US

Dimensions	[mm]	Ø 16
Materials		stainless steel (304/1.4301); stainless steel (316L/1.4404); FKM; NBR; PBT; PC; PA; PP; TPV
Materials (wetted parts)		PP

Displays / operating elements

Display	Display unit	4 x LED, green (cm, inch, °C, °F)
	switching status	1 x LED, yellow
	measured values	alphanumeric display, 4-digit
	parameter setting	alphanumeric display, 4-digit

Remarks

Pack quantity	1 pcs.

Electrical connection

Connector: 1 x M12; coding: A



Connection

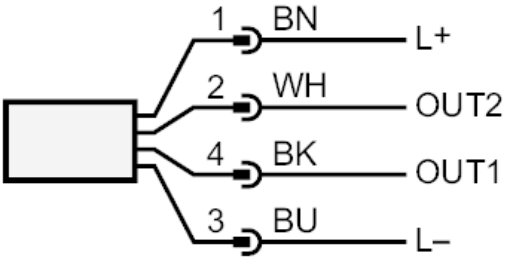

OUT1:	switching output IO-Link
OUT2:	analogue output
	colours to DIN EN 60947-5-2
	Core colours :
BK =	black
BN =	brown
BU =	blue
WH =	white