

CE

Model Number

BT-F130-A

Actuator for F130 series

Features

- **Suitable for mounting on valve actuators for use in valve technology**

Technical data

Mechanical specifications	
Shaft diameter	< 27.5 mm
Shaft height	20 mm
Material	
Housing	Mounting component: PBT
Spacer disk	PP (1 unit, 5.5 mm strong)
Stopper cap	PBT (1 unit black)
Mounting screw	for activator: 1.4305 / AISI 303 (1 unit M6 x 25)
Mass	25 g

Dimensions

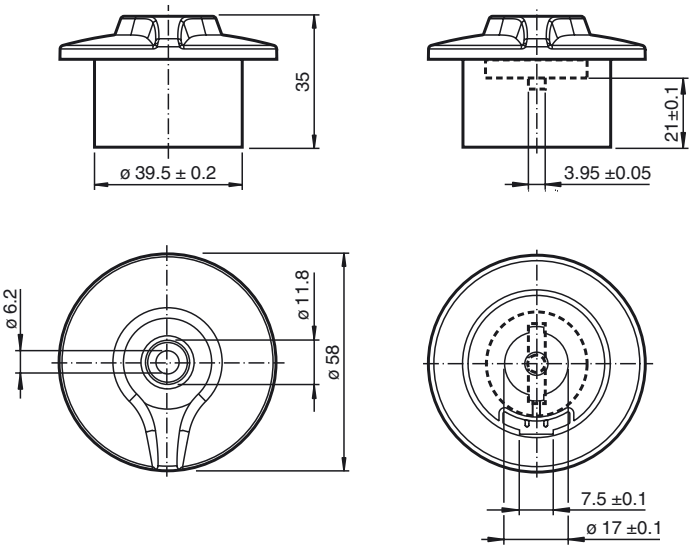

Release date: 2013-06-11 15:31 Date of issue: 2013-09-30 199856_eng.xml

Release date: 2013-06-11 15:31 Date of issue: 2013-09-30 199856_eng.xml

Refer to “General Notes Relating to Pepperl+Fuchs Product Information”.

Pepperl+Fuchs Group
www.pepperl-fuchs.com
USA: +1 330 486 0001
fa-info@us.pepperl-fuchs.com
Germany: +49 621 776 4411
fa-info@de.pepperl-fuchs.com
Singapore: +65 6779 9091
fa-info@sg.pepperl-fuchs.com

PEPPERL+FUCHS
SENSING YOUR NEEDS