SBY321

Flow sensor with integrated backflow prevention

SBY12IR0BPKG/US

Please note the changed housing design!

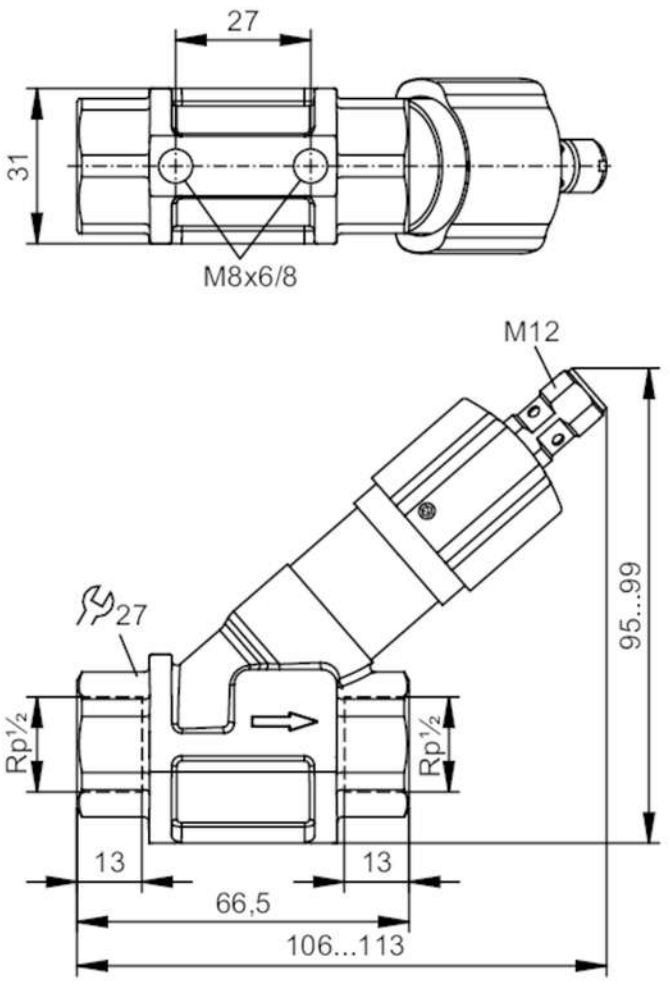

CE

Product characteristics		
Number of inputs and outputs		Number of digital outputs: 1
Process connection		Rp 1/2
Application		
Media		Liquids; water; glycol solutions; coolants
Medium temperature	[°C]	0...85
Pressure rating	[bar]	80
Pressure rating	[Mpa]	8
Electrical data		
Operating voltage	[V]	10...30 DC; (to SELV/PELV)
Current consumption	[mA]	< 15
Protection class		III
Reverse polarity protection		yes

SBY321

Flow sensor with integrated backflow prevention

SBY12IR0BPKG/US

Inputs / outputs		
Number of inputs and outputs	Number of digital outputs: 1	
Outputs		
Total number of outputs	1	
Output signal	switching signal	
Electrical design	PNP	
Number of digital outputs	1	
Output function	normally open	
Max. voltage drop switching output DC [V]	2.5	
Permanent current rating of switching output DC [mA]	100	
Short-circuit protection	yes	
Overload protection	yes	
Measuring/setting range		
Setting range [l/min]	0.2...4	
Accuracy / deviations		
Repeatability [% of the final value]	1	
Hysteresis [l/min]	0,1...0,2	
Measuring error [% of the final value]	± 5	
Response times		
Response time [s]	< 0.01	
Operating conditions		
Ambient temperature [°C]	0...60	
Storage temperature [°C]	-15...80	
Protection	IP 65; IP 67	
Tests / approvals		
EMC	DIN EN 61000-6-2	
	DIN EN 61000-6-3	
Shock resistance	DIN EN 60068-2-27	20 g (11 ms)
Vibration resistance	DIN EN 60068-2-6	5 g (10...2000 Hz)
Mechanical data		
Weight [g]	474.05	
Materials	brass chemically nickel-plated; aluminium anodised; PA	
Materials (wetted parts)	stainless steel (1.4310 / 301); stainless steel (316 / 1.4401); PBT; brass chemically nickel-plated; PPS; O-ring: FKM Polyolefin	
Process connection	Rp 1/2	
Switching cycles mechanical	10 million	
Displays / operating elements		
Display	switching status	4 x LED, yellow
Accessories		
Items supplied	Allen key	

SBY321

Flow sensor with integrated backflow prevention

SBY12IR0BPKG/US

Remarks

Remarks	Caution Do not turn the setting screw beyond the maximum value of the setting range.
	All data refer to water (20 °C).
Notes	Please note the changed housing design!
Pack quantity	1 pcs.

Electrical connection

Connector: 1 x M12; coding: A



Connection

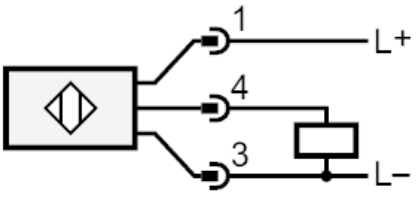

Diagrams and graphs

Pressure loss

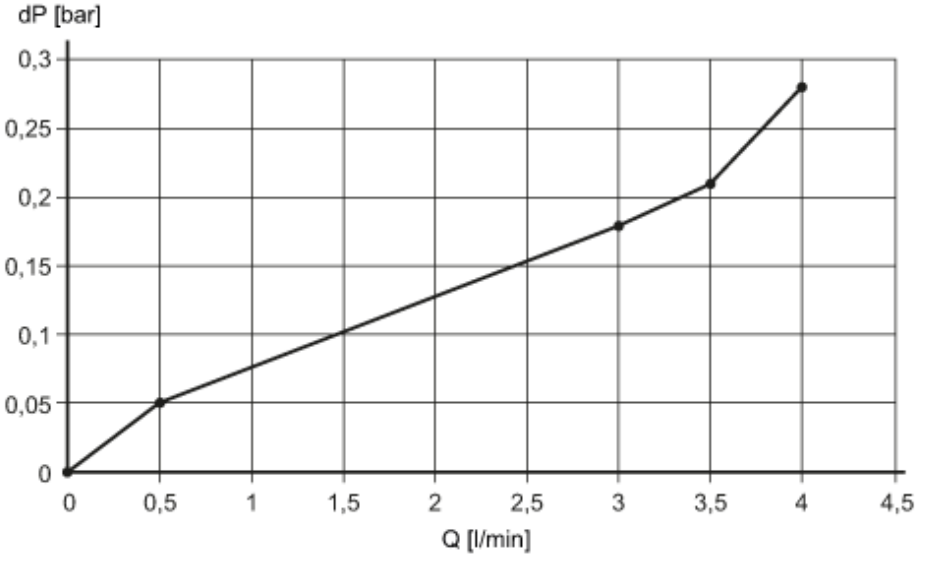

dP Pressure loss

Q volumetric flow quantity