Product sheet

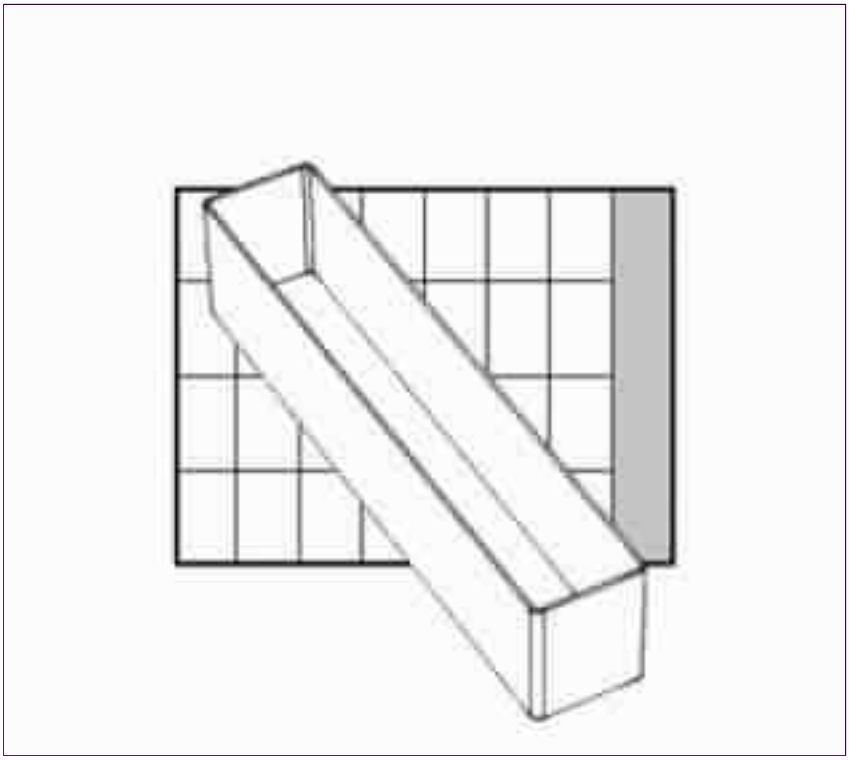

Item number/name **114585**

Insert 55 A9-4

EAN unitnumber 5733439114585

Colour Clear

Description of the item

Insert 55 A9-4. 24 per carton. Can be used for Assorter 55, Boxxser 55, CarryLite 55, Compact and drawer 250-3. Made of polypropylene (PP).

BOM items

Item number	Product	Quantity
223232	INSERT A9-4	1

Materials

Item number	Material
600132	Polypropylene - PP

Item alternative

Item number	Product	Quantity
112789	A9-4	216

Item dimensions

Net. Depth (mm) .....:	218,0
Net. Width (mm) .....:	39,0
Net. Height (mm) .....:	47,0
Inner Depth (mm) .....:	212,0
Inner Width (mm).....:	35,0
Inner Height (mm) .....:	43,0

Weight

Net weight (Kgs).....:	0,045
Tare weight (Kgs).....:	0,010
Gross weight (Kgs).....:	0,055

Volume

Multiple (Pieces).....:	24,00
Volume (m3).....:	0,00050

Capacity load

Carr. Load (Kgs).....:	0,00
Carr. Load (Ltrs).....:	0,40

Sales

raaco Great Britain Ltd
VAT No.: GB 232 6219 86
Wenrisc House, Meadow Court
High Street, Witney
Oxfordshire OX28 6ER
Tel: (01993) 776333
Fax: (01993) 776444

Headquarters:

raaco A/S
CVR No.: DK 22 12 28 19
VAT No.: DK 91 42 64 55
Platanvej 19
DK-4800 Nykøbing F
Tel.: +45 54 88 84 00

Inquiries on this or any of our products: Tel: (01993) 776333 - Fax: (01993) 776444 - E-mail: gbmail@raaco.com - www.raaco.com