Product datasheet

Specifications



Photoelectric sensors XU, XUY, fork, pot +/-, 15X59mm, 12...24 VDC, M8

XUYFNEP60015

Main

Range of product	Telemecanique Photoelectric sensors XU
Series name	Application
Electronic sensor type	Photo-electric sensor
Sensor name	XUY
Sensor design	Fork
Detection system	Thru beam
Emission	Infrared LED, modulated
Passage width	15 mm
Passage depth	59 mm
Material	Metal/plastic
Supply circuit type	DC
Wiring technique	4-wire
Discrete output type	PNP and NPN
Discrete output function	1 NO or 1 NC programmable
Electrical connection	1 male connector M8, 4 pins
Product specific application	Detection of labels Detection of double sheet Detection on vibrating rail Detection on small conveyor Detection of reference marks
[Sn] nominal sensing distance	15 mm

Complementary

Enclosure material	Painted aluminium and polyamide/glass
Keypad type	Green
Minimum object diameter for detection	0.2 mm
Type of output signal	Discrete
Output type	Solid state
Status LED	Adjustment mode and keypad locking: 1 LED (red) Output state: 1 LED (yellow)
[Us] rated supply voltage	12...24 V DC with reverse polarity protection

Disclaimer: This documentation is not intended as a substitute for and is not to be used for determining suitability or reliability of these products for specific user applications

Supply voltage limits	10…30 V DC
Switching capacity in mA	100 mA (overload and short-circuit protection)
Switching frequency	10 kHz
Maximum voltage drop	<2 V (closed state)
Current consumption	40 mA no-load
Load capacitance	330 nF
Time response	-20…20 µs
Setting-up	Sensitivity by numeric potentiometer
Net weight	0.19 kg

Environment

Product certifications	CE cULus
Ambient air temperature for operation	-20…60 °C
Ambient air temperature for storage	-30…80 °C
Immunity to ambient light	10000 lux natural light 5000 lux incandescent bulb
Vibration resistance	7 gn, amplitude = +/- 0.75 mm (f = 10…55 Hz) conforming to IEC 60068-2-6
Shock resistance	30 gn (duration = 11 ms) conforming to IEC 60068-2-27
IP degree of protection	IP65 conforming to IEC 60529

Packing Units

Unit Type of Package 1	PCE
Number of Units in Package 1	1
Package 1 Weight	70.0 g
Package 1 Height	1.5 cm
Package 1 width	13.2 cm
Package 1 Length	16.4 cm
Unit Type of Package 2	S01
Number of Units in Package 2	12
Package 2 Weight	1.028 kg
Package 2 Height	15 cm
Package 2 width	15 cm
Package 2 Length	40 cm

Offer Sustainability

REACh Regulation	REACh Declaration
EU RoHS Directive	Pro-active compliance (Product out of EU RoHS legal scope) EU RoHS Declaration
Mercury free	Yes
RoHS exemption information	Yes

Contractual warranty

Warranty	18 months

Product datasheet XUYFNEP60015

Dimensions Drawings

Dimensions

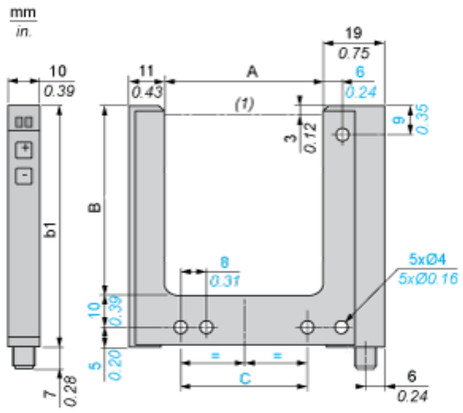

(1) Optical axis

Dimensions in mm

A	B	b1	C
15	59	74	27

Dimensions in in.

A	B	b1	C
0.59	2.32	2.91	1.06

Product datasheet XUYFNEP60015

Connections and Schema

Wiring Schemes

M8 Connector

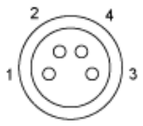

1 : BN: Brown
2 : WH: White
3 : BU: Blue
4 : BK: Black

4-Wire, PNP/NPN Outputs

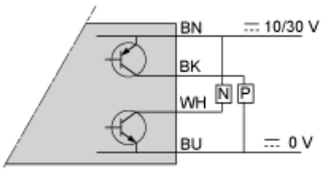

BN : Brown
WH : White
BK : Black
BU : Blue