MURR ELEKTRONIK
stay connected

M12 female 0° A-cod. with cable

PVC 5x0.34 bk UL/CSA 10m

Female straight
M12, 5-pole
A-coded
Art-No. 7005 - M12 Lite - (plastic hexagonal screw) on request
Plastic housings with good resistance against chemicals and oils.
The resistance to aggressive media should be individually tested for your application. Further details on request.
Further cable lengths on request.

Link to Product

Illustration

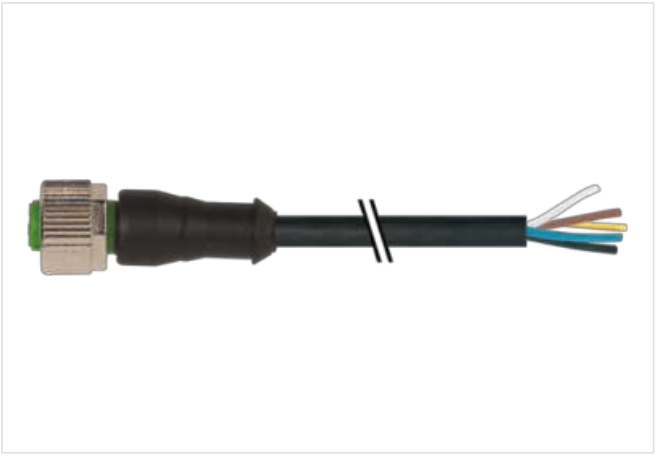

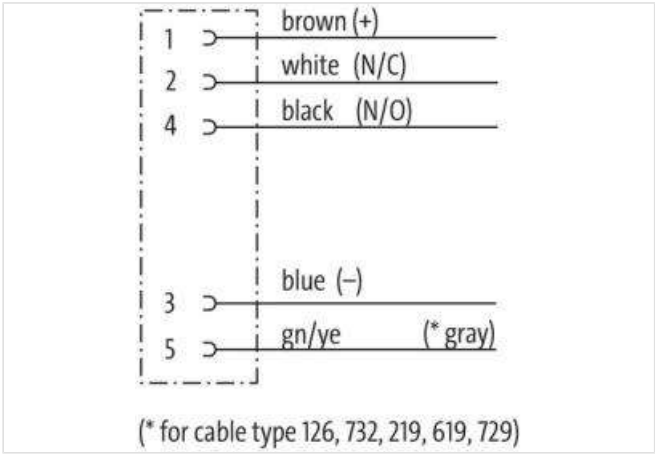

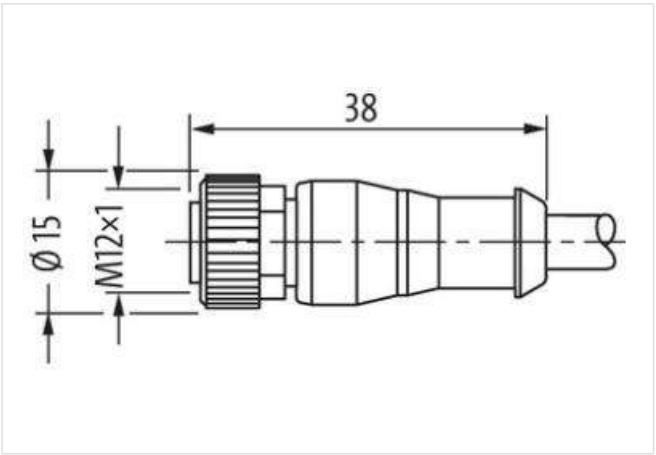

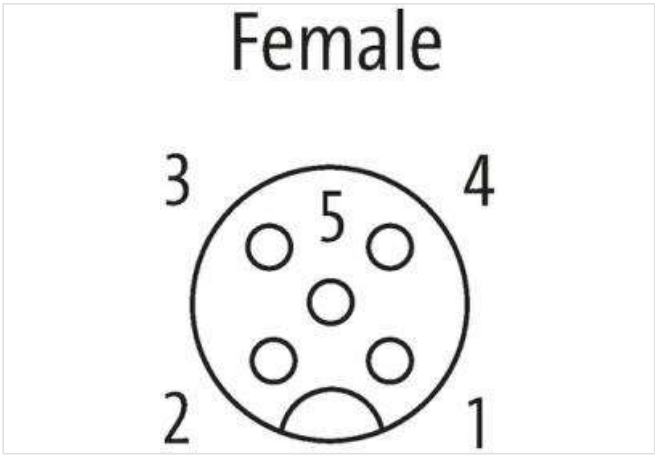

Product may differ from Image

Form

Form	12241

Technical Data

The information in this brochure has been compiled with the utmost care.
Liability for the correctness completeness and topicality of the information is restricted to gross negligence. Version: 2023-03-17

Operating voltage	max. 125 V AC/DC
Operating voltage (only UL listed)	30 V AC/DC
Rated surge voltage	1.5 kV
Operating current per contact	max. 4 A
No. of poles	5
Material group	IEC 60664-1, category I
Coding	A-coded
LED display	no
Locking of ports	Screw thread (M12×1 mm) recommended torque 0.6 Nm, self-securing
Protection	IP65, IP66K, IP67 inserted and tightened (EN 60529)
Material	PUR
Locking material	Zinc die casting, matte nickel plated
suitable for corrugated tube (internal Ø)	10 mm
Compression gland	M12 (SW13)
General data	
Standards	DIN EN 61076-2-101 (M12)
Mounting method	inserted, tightened
Material contact	Copper alloy
Material contact surface	Au
Material gasket	FKM
Pollution Degree	3
Stripping length (jacket)	20 mm
Temperature range	-25...+85 °C, depending on cable quality
Cables	
No./diameter of wires	5× 0.34 mm²
Wire isolation	PVC (br, wh, bl, bk, gr)
Outer Ø	5.2 mm ±5%
Cable identification	619
Cable Type	1 (PVC)
Approval (cable)	UL (AWM-Style 2464/1731), CSA
Cable weight [g/m]	48,4 g
Material wire	Cu wire, bare
Resistor (core)	max. 60 Ω/km (20 °C)
Single wire Ø (core)	0.15 mm
Construction (core)	19× 0.15 mm (multi-strand wire class 5)
Diameter (core)	5× 0.34 mm²
AWG	similar to AWG 22
Material wire isolation	PVC
Material property (wire isolation)	CFC-, cadmium-, silicone- and lead-free
Shore hardness (wire isolation)	45 ±5 D
Wire-Ø incl. isolation	1.25 mm ±5%
Color/numbering of wires	br, bk, bl, wh, gr
Stranding combination	5 wires twisted around central filler
Shield	no
Material jacket	PVC
Material property (jacket)	CFC-, cadmium-, silicone- and lead-free
Shore hardness (jacket)	85 ±5 A
Outer-Ø (jacket)	5.2 mm ±5%
Color (jacket)	black
Jacket Color	black
chemical resistance	good resistance to oil, gasoline and chemicals
thermal resistance	flame retardant UL 1581 VW1 / CSA FT1
Nominal voltage	UL 300 V AC

The information in this brochure has been compiled with the utmost care.
Liability for the correctness completeness and topicality of the information is restricted to gross negligence. Version: 2023-03-17

Test voltage	2000 V AC
Current load capacity	to DIN VDE 0298-4
Temperature range (fixed)	-30...+80 °C
Temperature range (fixed)	-30...+80 °C
Temperature range (mobile)	-5...+80 °C
Temperature range (mobile)	-5...+80 °C
Bend radius (fixed)	5× outer Ø
Bend radius (moving)	10× outer Ø
Bend radius (moving)	10× outer Ø
Material jacket	PVC (UL/CSA)
Product article number of manufacturer	7000-12241-6191000
Cable length	10 m

The information in this brochure has been compiled with the utmost care.
Liability for the correctness completeness and topicality of the information is restricted to gross negligence. Version: 2023-03-17