P 100-2-160

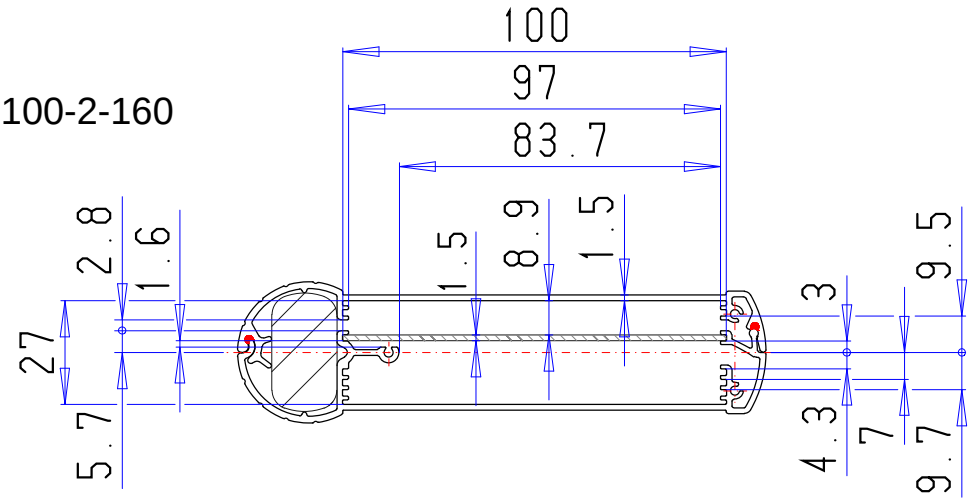
100
97
83.7
2.8
1.6
27
5.7
1.5
8.9
1.5
3
4.3
9.5
7
9.7

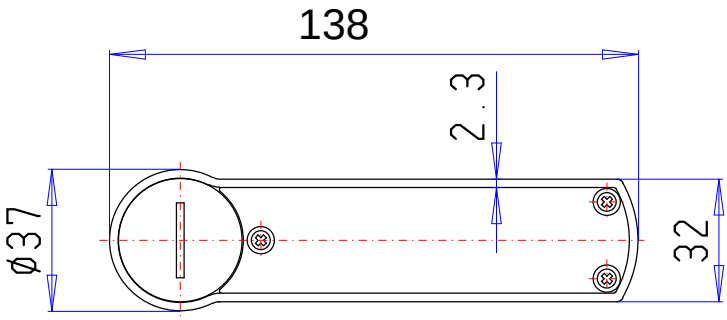
138
2.3
ø37
32

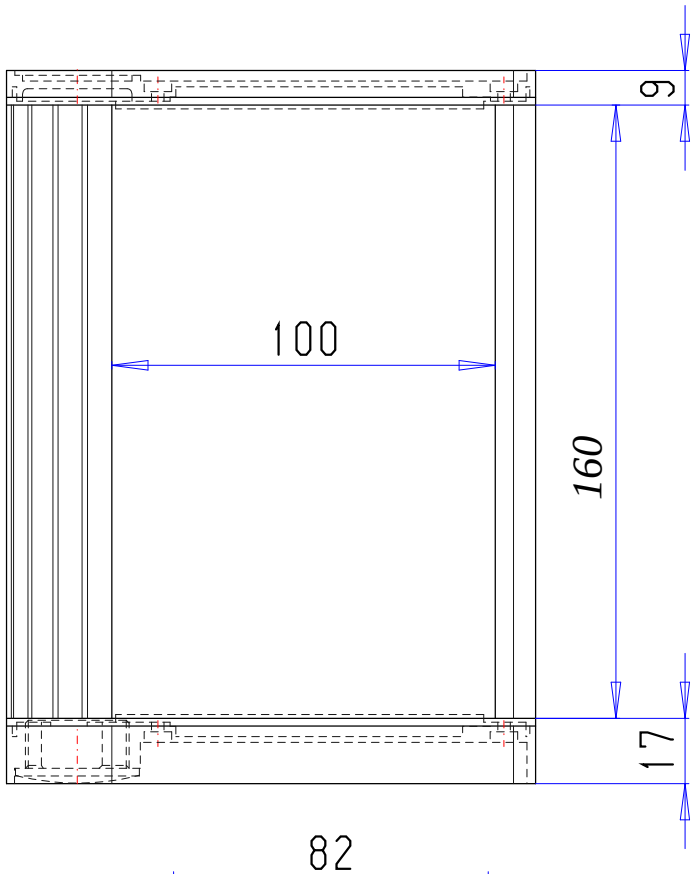
9
100
160
17

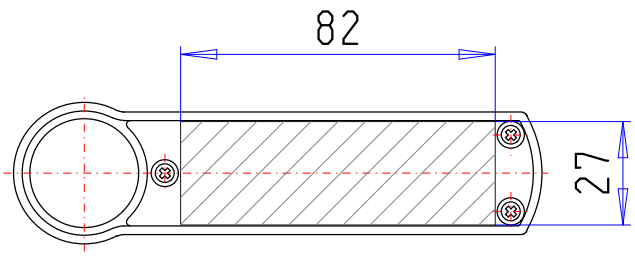
82
27