E43306

Process adapter Varivent

ADAPT G1/2-VARIVENT D50

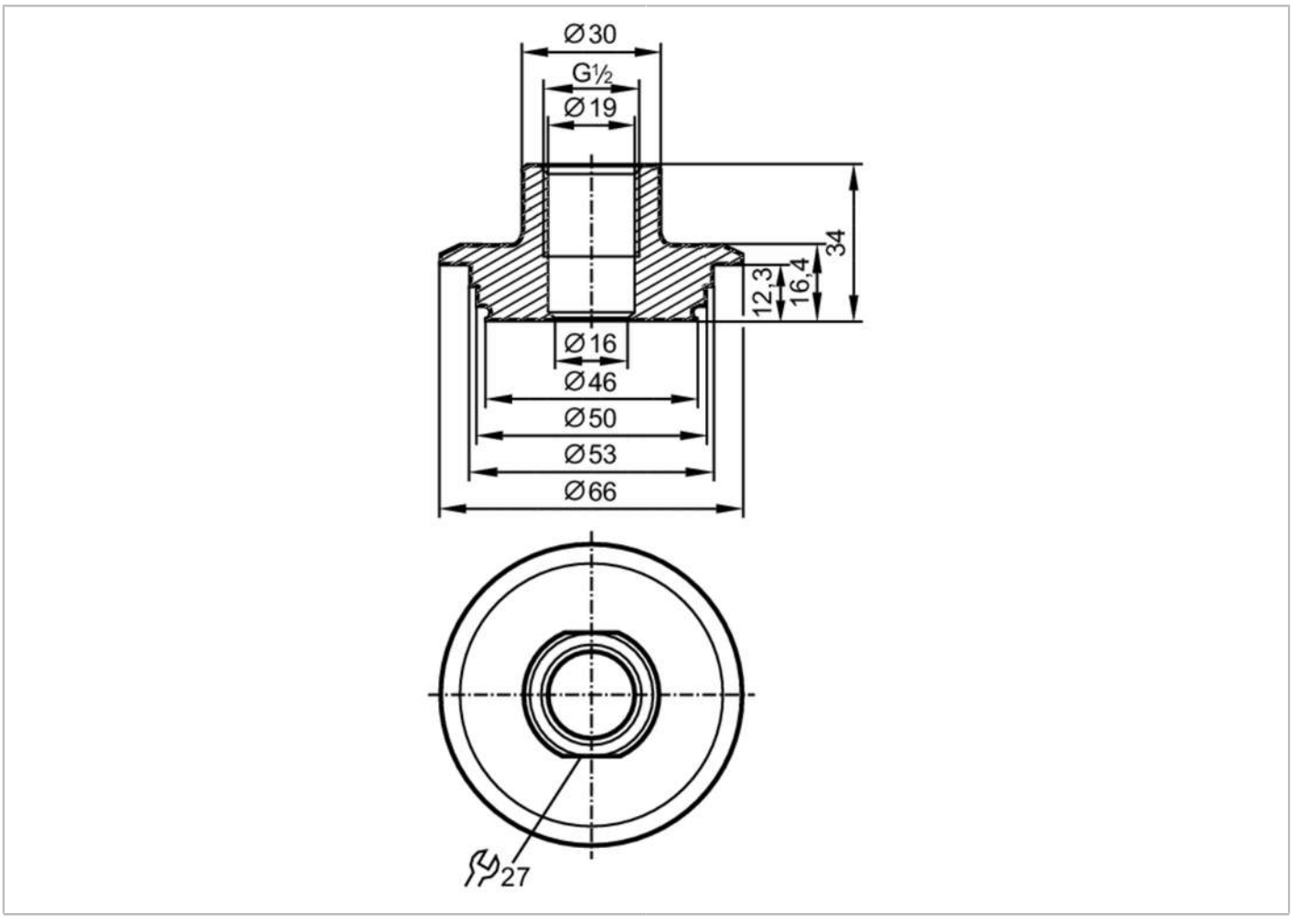

EC 1935/2004 EHEDG Tested FCM FDA

Application		
Pressure rating	[bar]	25
Mechanical data		
Weight	[g]	367
Materials		stainless steel (1.4435 / 316L)
Sensor connection		G 1/2 sealing cone
Process connection		Varivent Form F, DN25 (1"), Ø 50 mm
Surface characteristics Ra/Rz of the wetted parts		0.4 / 4
Remarks		
Pack quantity		1 pcs.