O5K500

Contrast sensor

O5K-FAKG/US100

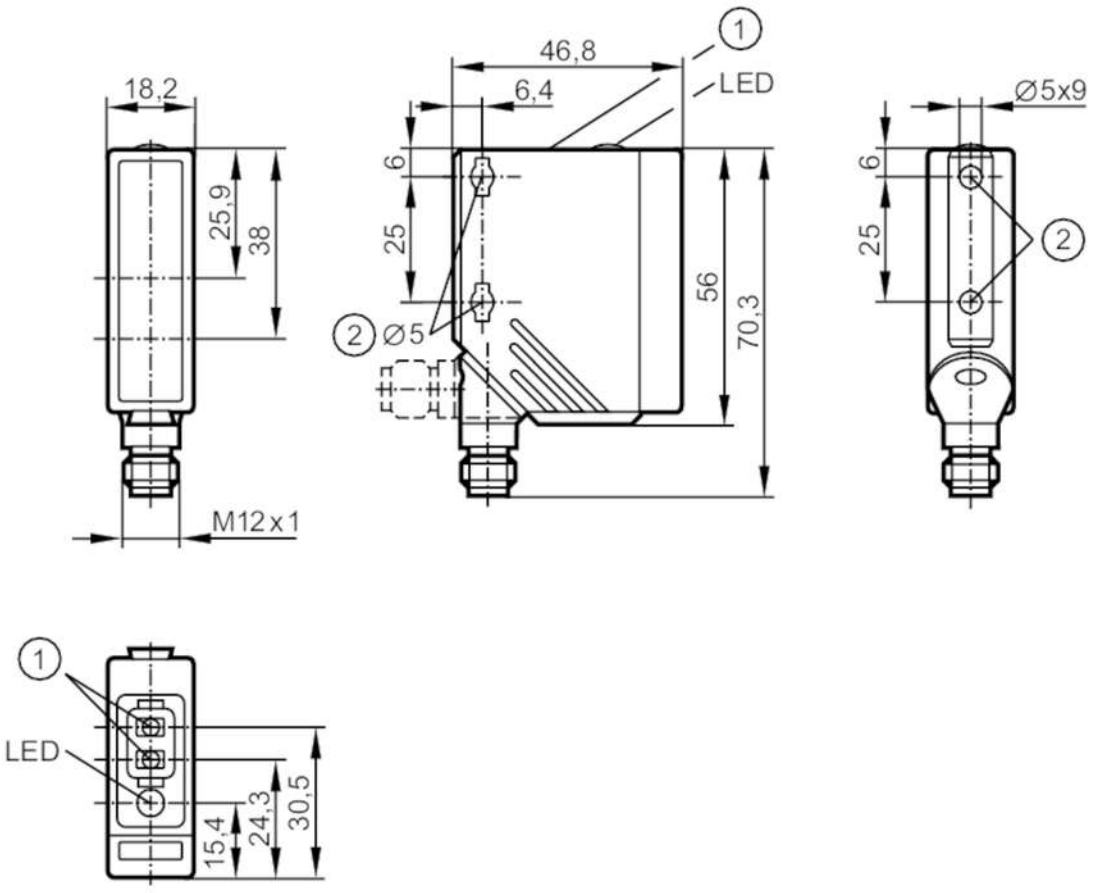

1 programming buttons
2 When a M5 mounting screw is used, the max. tightening torque is 2 Nm.
receiver in upper lens
transmitter in lower lens

Product characteristics		
Type of light		red light; green light; blue light
Housing		rectangular
Electrical data		
Operating voltage	[V]	10...36 DC
Current consumption	[mA]	50; ((24 V))
Protection class		II
Reverse polarity protection		yes
Type of light		red light; green light; blue light
Wave length	[nm]	625; 525; 465
Outputs		
Electrical design		PNP/NPN; (automatic load detection PNP/NPN)
Output function		light-on/dark-on mode; (programmable)
Max. voltage drop switching output DC	[V]	2.5
Permanent current rating of switching output DC	[mA]	200

O5K500

Contrast sensor

O5K-FAKG/US100

Switching frequency DC	[Hz]	10000	
Short-circuit protection		yes	
Type of short-circuit protection		pulsed	
Overload protection		yes	
Detection zone			
Range	[mm]	18...22	
Max. light spot width	[mm]	1.5	
Max. light spot height	[mm]	5	
Response times			
Response time	[ms]	< 0.05	
Operating conditions			
Ambient temperature	[°C]	-25...60	
Protection		IP 67	
Tests / approvals			
EMC		EN 60947-5-2	
MTTF	[years]	568	
Mechanical data			
Weight	[g]	79.5	
Housing		rectangular	
Dimensions	[mm]	56 x 18.2 x 46.8	
Materials		housing: PA; bezel: stainless steel; operator interface: TPU / PC	
Lens material		front pane:PMMA	
Lens alignment		side lens	
Displays / operating elements			
Display		switching status	1 x LED, yellow
Teach function		yes	
Electronic lock		yes	
Remarks			
Remarks		operating voltage "supply class 2" according to cULus	
Pack quantity		1 pcs.	

O5K500

Contrast sensor

O5K-FAKG/US100

Electrical connection

Connector: 1 x M12; coding: A

