OY422S

Safety light grid

OYA0810-03-4-15-P-1-A

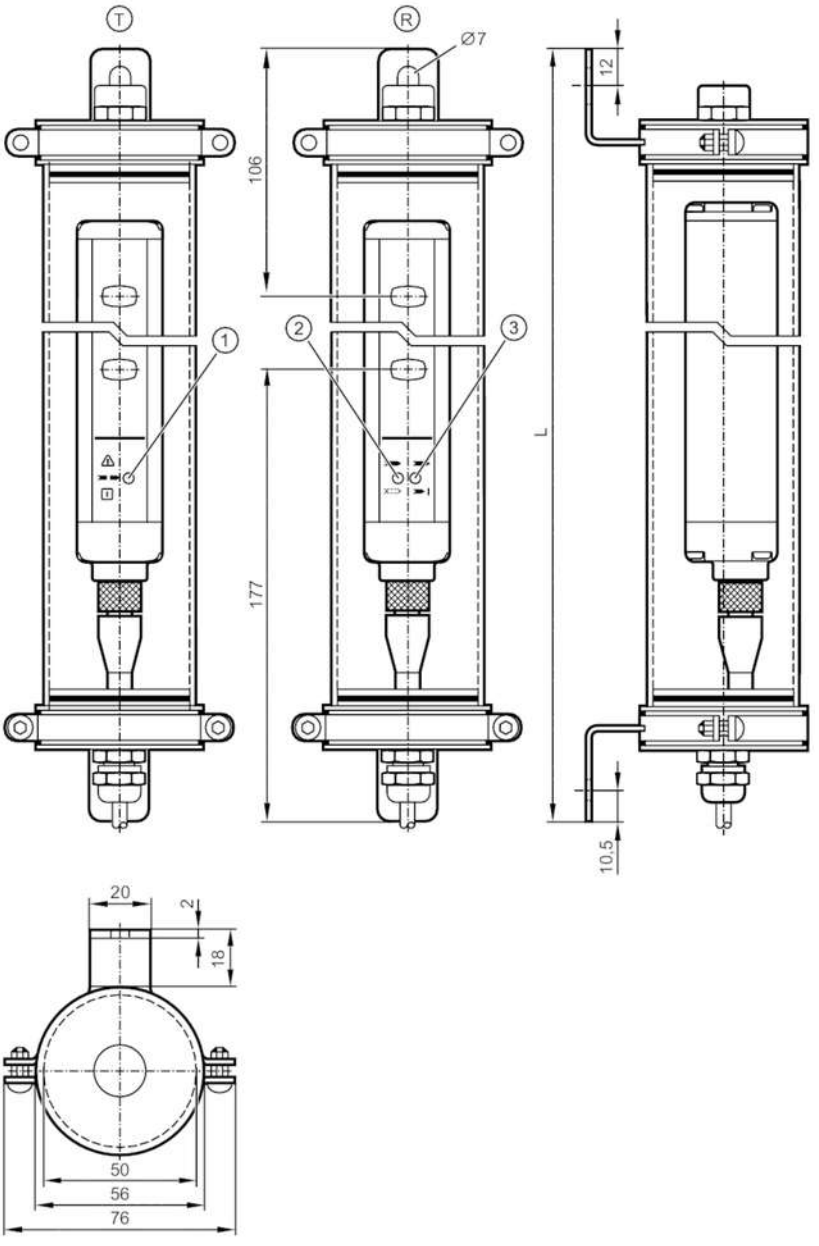

T transmitter
R receiver
1 LED three-colour red / green / orange
2 LED 2-colour yellow/blue
3 LED 2-colour red/green

Product characteristics	
Type of light	infrared light
Electrical design	PNP
Protection	IP 65; IP 67; IP 69K; (with protective tube: IP 69K)
Application	
Protective function	access prevention body protection

OY422S

Safety light grid

OYA0810-03-4-15-P-1-A

Electrical data		
Operating voltage tolerance	[%]	20
Operating voltage	[V]	24 DC
Protection class		III
Reverse polarity protection		yes
Power-on delay time	[s]	< 2
Type of light		infrared light
Wave length	[nm]	950
Receiver		
Current consumption	[mA]	83
Current consumption heating	[mA]	417
Transmitter		
Current consumption	[mA]	42
Current consumption heating	[mA]	417
Outputs		
Electrical design		PNP
Number of OSSD outputs		2
Max. current load per OSSD output	[mA]	400; (24 V)
Short-circuit protection		yes
Detection zone		
Protected area height	[mm]	810
Number of beams		3
Protection area width (low light intensity)	[m]	0...7
Protection area width (high light intensity)	[m]	3...15
Response times		
Response time	[ms]	2.5
Operating conditions		
Ambient temperature	[°C]	-20...55
Max. relative air humidity	[%]	95
Protection		IP 65; IP 67; IP 69K; (with protective tube: IP 69K)
Tests / approvals		
EMC		IEC 61496-1
Shock resistance		IEC 61496-1
Vibration resistance		IEC 61496-1
Safety classification		
ESPE type (IEC 61496-1)		4
Complies with the requirements		ISO 13849-1: 2015 category 4, PL e
		IEC 61508 SIL 3
		IEC 62061 SIL 3
Mission time TM	[h]	175200
PFH	[1/h]	1,0E-08

OY422S

Safety light grid

OYA0810-03-4-15-P-1-A

Mechanical data		
Weight	[g]	6450
Dimensions	[mm]	1077 x 76 x 74
Materials		thermowell: PMMA transparent; Protective cap: POM; clamp: stainless steel (316L/1.4404); Sealing: silicone
Length L	[mm]	1077

Displays / operating elements		
Display	transmitter	1 x LED
	receiver	2 x LED

Remarks	
Pack quantity	1 pcs.

Electrical connection - receiver

Cable: 15 m, PVC; Maximum cable length: 100 m; 10 x 0.34 mm²

Connection

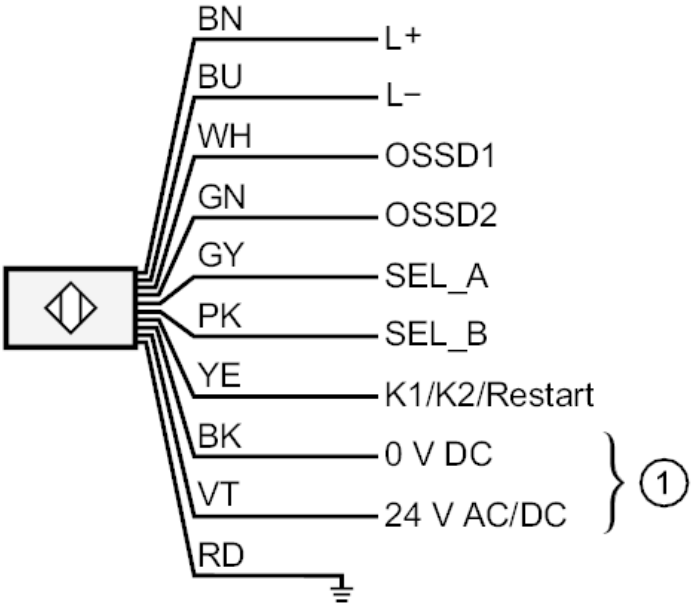

1: heating
Core colours :

BK =	black
BN =	brown
BU =	blue
GN =	green
GY =	grey
PK =	pink
RD =	red
VT =	lilac
WH =	white
YE =	yellow

OY422S

Safety light grid

OYA0810-03-4-15-P-1-A

Electrical connection - transmitter

Cable: 15 m, PVC; 8 x 0.34 mm²

Connection

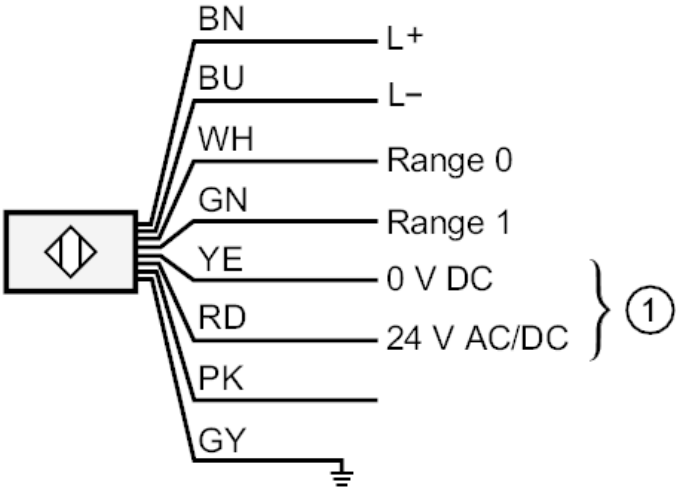

1:	heating
PK:	not used
	Core colours :
BN =	brown
BU =	blue
GN =	green
GY =	grey
PK =	pink
RD =	red
WH =	white
YE =	yellow