TBSB-L4-CS09
Machine Safety – Switch Box for Disconnecting the Actuator Voltage V 2

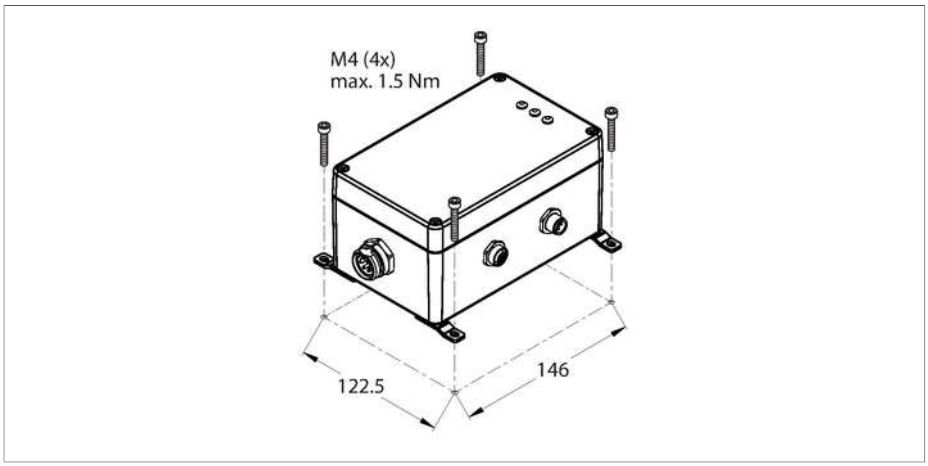

Features

- Die-cast aluminum housing
- 7/8" males, 4-pin, for power supply
- Electromechanical switch-off box
- Voltage V2 disconnected by external safety module via M12 input
- Feedback circuit for monitoring by external safety module via M12 output
- Disconnection up to PLe in accordance with EN ISO 13849-1 possible

Technical data

Type	TBSB-L4-CS09
ID no.	100003273
Function	for RFID safety switches
Ambient temperature	-25…+40 °C
Protection class	IP65
Vibration resistance	acc. to EN 60068-2-6 Acceleration up to 20 g
Shock test	acc. to EN 60068-2-27
Approvals	CE
Safety Data	
PL acc. to DIN EN 13849-1:2008	e
Category acc. to DIN EN 13849-1:2008	4
SIL according IEC 61508	3
Useful Lifetime	20 years

TBSB-L4-CS09| 06-05-2021 00-36 | Technical modifications reserved