RAMO 30 E, M12, round collar, 2 NC, Gold, M12 5-pin A-coded, reset by rotating, Mushroom head red, arrows red



fields of application

- Measurement-control-regulation
- Electrical engineering
- Mechanical and system engineering
- Automotive
- Signalling systems
- Vehicle construction
- Chemical industry
- Industrial robots

special features

- One-piece enclosed housing for protection classes of at least IP 65
- Plug & Play with M12 connection
- RAMO EDGE: mounting bracket for decentralized installation
- Design matching the RAFIX command devices

description

Emergency stop with M12 connection: RAMO E switches are designed with two NC contacts for a switching voltage of 35 V. They comply with all applicable ISO and IEC standards and are characterized by their simple, time-saving installation. Like the entire RAMO series, the emergency stop switches feature installation-friendly M12 plug-in connections that reduce wiring effort to a minimum.

Additional information according to UL certificate:
For Class 2 Power Source or Limited Voltage / Limited Current only
Installation only by trained specialist personnel.
Type 4x Indoor only with cable "Cat. No. 7000-08061-0210100 PUR 4x0.25mm² with M8 connector, rated max. 30VAC/DC 4A, manufactured by Murrelektronik GmbH" and "Cat. No. 7000-12221-0340100 PUR 4x0.34mm² with M12 connector, rated max. 30VAC/DC 4A, manufactured by Murrelektronik GmbH"
For Use on a Flat Surface of a Type 1 or 4x indoor only Enclosure.

technical data

general

Potential free	yes
Color of mushroom	red
Legending color	red
Collar color	yellow
Collar shape	round
Operating temperature, min.	-40 °C
Operating temperature, max.	85 °C
Storage temperature, min.	-40 °C
Storage temperature, max.	90 °C
illuminated	No
Packaging	Box

direct links

- RAFI eCatalog

The information in this data sheet only contains general descriptions and / or performance features, which may not apply precisely as described to the respective application, and which my change due to further product enhancements. The technical data, illustrations and other information about our products are the mere results of individual technical testing. These descriptions and other product features are only binding if they expressly agreed upon at the time of the conclusion of a binding contract. In all other cases, we reserve the right to make technical changes as well as changes of availability. Pictures and other graphic illustrations are approximations only. All product names may be trademarks or brand names of the RAFI Group or any other sub-supplier of RAFI. The use of such by any third parties for their own purposes may infringe the rights of the respective entity holding those rights.

RAFI GmbH & Co. KG

Ravensburger Str. 128-134
88276 Berg / Ravensburg
Germany
www.rafi-group.com,
info.headquarters@rafi-group.com

Packaging unit	2 pcs.
net weight	32 g
Operating life	50,000 cycles
B10	65,000 cycles
B10d	130,000 cycles
Degree of protection, front side, according to DIN EN 60529	IP65 IP66
Degree of protection, rear side, according to DIN EN 60529	IP65 IP67
UL Enclosure Type Rating front side	type 4X indoor
Environment resistance	IEC 60068-2-14 IEC 60068-2-30 IEC 60068-2-33 IEC 60068-2-78
Shock resistance according to standard IEC 60068-2-27	50 g at 11 ms amplitude semi-sinusoidal
Salt-spray resistance according to standard	IEC 60068-2-11
Impact resistance IK	06 side 07 frontal
oscillation restistance according to standard IEC 60068-2-6	5 g at 10...500 Hz
MOQ order	2 pcs.
Pollution degree acc. to DIN EN 61010-1	Pollution degree 2
RoHS compliant	Yes
REACH compliant	Yes

mounting diameters

Outside dimension, length	34.5 mm
Outside dimension, width	34.5 mm
Outside dimension, height	69.7 mm
Mounting hole	30.3 mm
Mounting depth	36.3 mm
Installation height	33.4 mm
Grid, min.	35 mm

mechanical data

Actuation function	latching
Resistance to force on the side	300 N
Contact function	2 NC
Contact material	Gold
Resetting	by rotating
Fixing	Threaded ring
Threaded ring torque, max.	1.2 Nm
Terminal on the rear	M12 5-pin A-coded
PIN 1	Normally closed contact 1
PIN 2	Normally closed contact 2
PIN 4	Normally closed contact 1

The information in this data sheet only contains general descriptions and / or performance features, which may not apply precisely as described to the respective application, and which my change due to further product enhancements. The technical data, illustrations and other information about our products are the mere results of individual technical testing. These descriptions and other product features are only binding if they expressly agreed upon at the time of the conclusion of a binding contract. In all other cases, we reserve the right to make technical changes as well as changes of availability. Pictures and other graphic illustrations are approximations only. All product names may be trademarks or brand names of the RAFI Group or any other sub-supplier of RAFI. The use of such by any third parties for their own purposes may infringe the rights of the respective entity holding those rights.

RAFI GmbH & Co. KG

Ravensburger Str. 128-134
88276 Berg / Ravensburg
Germany
www.rafi-group.com,
info.headquarters@rafi-group.com

PIN 5	Normally closed contact 2

electrical data

Rated insulation voltage	250 V
Rated surge voltage	2,500 V
Rated operating voltage	35 V (AC-15) 35 V (DC-13)
Rated voltage, min.	1 V
Rated voltage, max.	35 V
Voltage type	DC
Rated operating current	0.1 A
Rated operating voltage	1-35 V
Rated current, min.	0.001 A
Rated current, max.	0.1 A
Power loss	0.00080 W
Overvoltage category	2
Kind of short circuit protective device	fuse 250 V / 0,1 A / 1,5 kA gG quick
Conditional short circuit current	1,000 A

The information in this data sheet only contains general descriptions and / or performance features, which may not apply precisely as described to the respective application, and which my change due to further product enhancements. The technical data, illustrations and other information about our products are the mere results of individual technical testing. These descriptions and other product features are only binding if they expressly agreed upon at the time of the conclusion of a binding contract. In all other cases, we reserve the right to make technical changes as well as changes of availability. Pictures and other graphic illustrations are approximations only. All product names may be trademarks or brand names of the RAFI Group or any other sub-supplier of RAFI. The use of such by any third parties for their own purposes may infringe the rights of the respective entity holding those rights.

RAFI GmbH & Co. KG

Ravensburger Str. 128-134
88276 Berg / Ravensburg
Germany
www.rafi-group.com,
info.headquarters@rafi-group.com

drawings

Dimensioned drawing

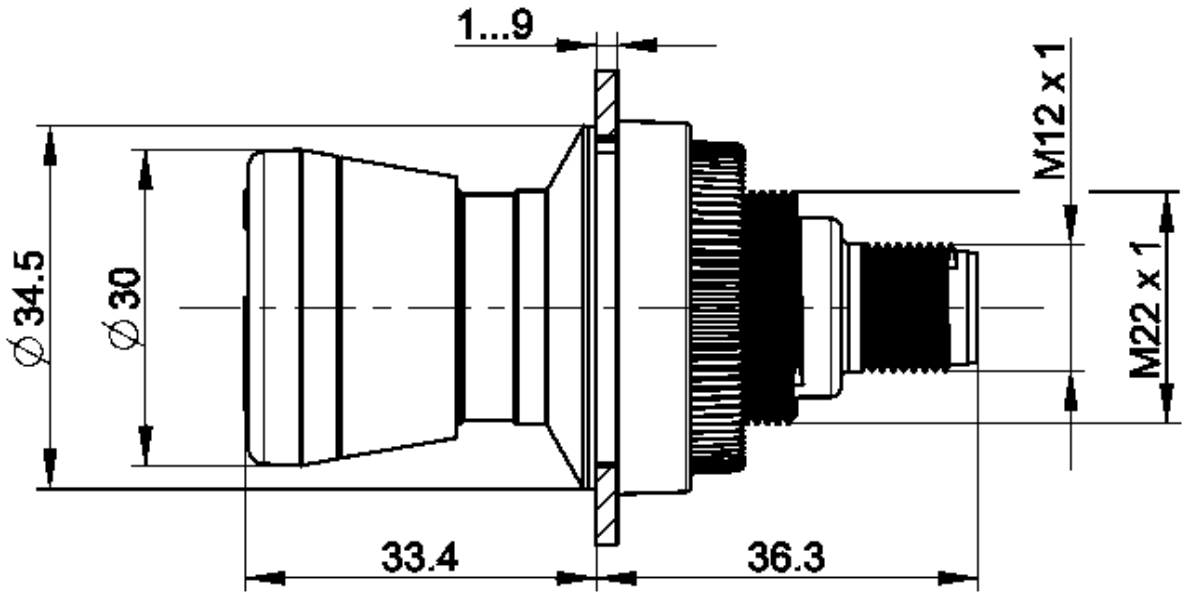

Mounting hole drawing

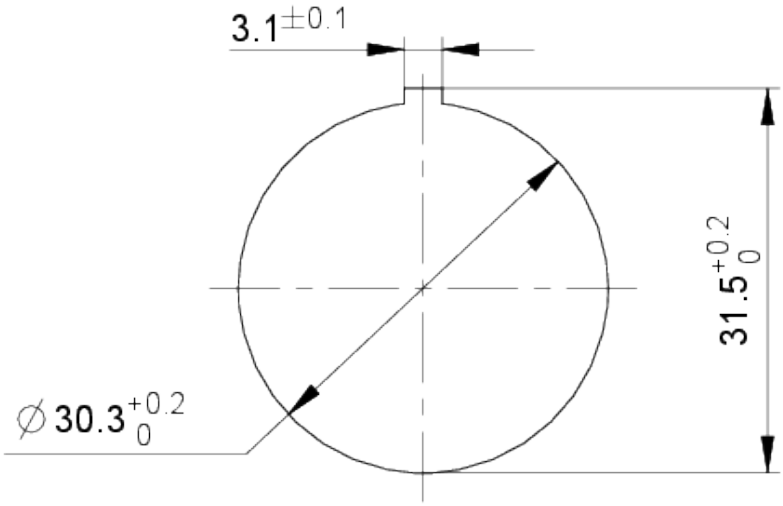

The information in this data sheet only contains general descriptions and / or performance features, which may not apply precisely as described to the respective application, and which my change due to further product enhancements. The technical data, illustrations and other information about our products are the mere results of individual technical testing. These descriptions and other product features are only binding if they expressly agreed upon at the time of the conclusion of a binding contract. In all other cases, we reserve the right to make technical changes as well as changes of availability. Pictures and other graphic illustrations are approximations only. All product names may be trademarks or brand names of the RAFI Group or any other sub-supplier of RAFI. The use of such by any third parties for their own purposes may infringe the rights of the respective entity holding those rights.

RAFI GmbH & Co. KG

Ravensburger Str. 128-134
88276 Berg / Ravensburg
Germany
www.rafi-group.com,
info.headquarters@rafi-group.com

Schematic diagram

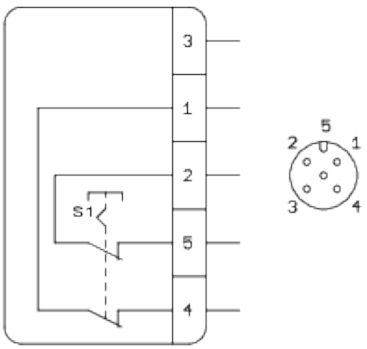

The information in this data sheet only contains general descriptions and / or performance features, which may not apply precisely as described to the respective application, and which my change due to further product enhancements. The technical data, illustrations and other information about our products are the mere results of individual technical testing. These descriptions and other product features are only binding if they expressly agreed upon at the time of the conclusion of a binding contract. In all other cases, we reserve the right to make technical changes as well as changes of availability. Pictures and other graphic illustrations are approximations only. All product names may be trademarks or brand names of the RAFI Group or any other sub-supplier of RAFI. The use of such by any third parties for their own purposes may infringe the rights of the respective entity holding those rights.

RAFI GmbH & Co. KG

Ravensburger Str. 128-134
88276 Berg / Ravensburg
Germany
www.rafi-group.com,
info.headquarters@rafi-group.com

mounting

LUMOTAST 16, LUMOTAST 22, LUMOTAST 25, RAMO 22, RAMO 30

Betriebsanleitung Not-Halt-Befehlsgeräte (Original) | **Operating Instructions EMERGENCY STOP Control Units (Translation of the source text)** | **Mode d'emploi auxiliaires de commande d'ARRÊT D'URGENCE (Traduction original)**

(D) **1. Sicherheitshinweise**

- Vor Inbetriebnahme bitte Betriebsanleitung sorgfältig lesen.
- Not-Halt-Befehlsgeräte erfüllen eine Personenschutz-Funktion. Unsachgemäßer Einbau, sachwidrige Anwendung oder Manipulationen können zu schweren Verletzungen von Personen führen!
- Not-Halt-Befehlsgeräte dürfen nicht umgangen, entfernt oder auf andere Weise unwirksam gemacht werden!
- Vor Beginn der Installation Anlage und Gerät spannungsfrei schalten!
- Vor Erst-Inbetriebnahme der Maschine oder Anlage Not-Halt-Befehlsgerät durch Testbetätigung auf korrekte Montage und Funktion überprüfen.
- Not-Halt-Befehlsgeräte mit sichtbaren Beschädigungen sind unverzüglich auszutauschen.
- Not-Halt-Funktion darf nicht als Ersatz für Schutzmaßnahmen oder andere Sicherheitsfunktionen verwendet werden.
- Not-Halt-Funktion darf die Wirksamkeit von Schutzreinrichtungen oder von Einrichtungen mit anderen Sicherheitsfunktionen nicht beeinträchtigen.

(GB) **1. Safety instructions**

- Please read the operating instructions carefully prior to use.
- EMERGENCY STOP control units are designed to protect persons. Inappropriate installation, improper use or inadmissible manipulation may result in severe injuries!
- EMERGENCY STOP control units must never be bypassed, removed or disabled in any other way!
- Disconnect the power supply to the machinery and device prior to installation!
- Operate the EMERGENCY STOP control unit to test and verify proper installation and function prior to initial start-up of the machine or line.
- An EMERGENCY STOP control unit with an obvious defect must be replaced immediately.
- The emergency stop function is not to be used for safety measures or safety functions.
- The emergency stop function must not compromise the effectiveness of safety devices or devices with other safety functions.

(F) **1. Consignes de sécurité**

- Il faut soigneusement lire le mode d'emploi avant la mise en service.
- Les auxiliaires de commande d'ARRÊT D'URGENCE remplissent une fonction de protection personnelle. Un montage inapproprié, une application contre-indiquée ou une manipulation peuvent causer des blessures corporelles graves!
- Il est interdit de ponter, d'enlever ou de rendre inopérants les auxiliaires de commande d'ARRÊT D'URGENCE!
- Avant d'entamer l'installation il faut mettre l'installation et l'appareil hors tension!
- Avant la première mise en service de la machine ou de l'installation, contrôler l'auxiliaire de commande d'ARRÊT D'URGENCE quant au montage et à un fonctionnement corrects.
- Les auxiliaires de commande d'ARRÊT D'URGENCE présentant des dommages visibles sont à remplacer sans tarder.
- La fonction d'arrêt d'urgence ne peut pas être utilisée en remplacement de mesures de protection ou d'autres fonctions de sécurité.
- La fonction d'arrêt d'urgence ne peut pas entraver l'efficacité de dispositifs de sécurité ou de dispositifs possédant d'autres fonctions de sécurité

(D) **2. Allgemeine Beschreibung und bestimmungsgemäße Verwendung**

Not-Halt-Befehlsgeräte sind elektromechanische Schaltgeräte zum Schutz von Personen. Sie dienen der schnellen Abschaltung um Maschinen, Fahrzeuge und Anlagen in einen sicheren Zustand zu bringen, um Gefahren und Schäden für Mensch und Maschine zu vermeiden oder zu verringern.

Für die Inbetriebnahme, den Einsatz und technischen Überprüfungen gelten im speziellen folgende Vorschriften:

- Die Maschinenrichtlinie 2006/42/EG
- Die Sicherheitsvorschriften sowie
- Die Unfallverhütungsvorschriften / Sicherheitsregeln

Hersteller und Benutzer von Maschinen, an denen Not-Halt-Befehlsgeräte eingesetzt werden, tragen die Verantwortung für die Beachtung der Betriebsanleitung, wie auch für die Einhaltung der für sie geltenden Sicherheitsvorschriften und -regeln.

Für den Einbau und Betrieb von Not-Halt-Befehlsgeräten müssen zur bestimmungsgemäßen Verwendung folgende Anforderungen beachtet und eine Gefahrenbewertung durchgeführt werden:

- EN ISO 13849-1:2015
- EN ISO 13850:2015
- EN ISO 13849-2:2012
- EN 60204-1/A1:2009

(GB) **2. General description and intended use**

EMERGENCY STOP control units are electromechanical switching devices designed to protect persons. They are used for instant disconnection to achieve a safe status of machines, vehicles or other equipment in order to avoid or reduce risks or damage to man and machine.

The following standards and regulations apply to their start-up, use and technical inspections, without limitation:

- Machinery Directive 2006/42/EC
- Safety standards
- Accident prevention regulations / rules for safety

Manufacturers and users of machines provided with EMERGENCY STOP control units are responsible for ensuring that the operating instructions are observed and the applicable safety standards and rules complied with.

For the installation and operation of EMERGENCY STOP control devices in line with the intended use, the following requirements must be observed and a risk assessment must be performed:

- EN ISO 13849-1:2015
- EN ISO 13850:2015
- EN ISO 13849-2:2012
- EN 60204-1/A1:2009

(F) **2. Description générale et application conforme aux prescriptions**

Les auxiliaires de commande d'ARRÊT D'URGENCE sont des appareils de commutation électromécaniques pour protéger des personnes. Ils servent à couper rapidement les machines, les véhicules et les installations, à les amener dans un état de sécurité fiable pour éviter ou diminuer les risques de dommages corporels et de dégâts matériels. Pour la mise en service, l'utilisation et les contrôles techniques, il faut respecter les prescriptions suivantes:

- La directive sur les machines selon la norme 2006/42/EG
- Les règlements de sécurité ainsi que
- Les instructions sur la prévention des accidents / règlements de sécurité

C'est aux fabricants et utilisateurs de machines où des auxiliaires de commande d'ARRÊT D'URGENCE sont utilisés, qu'incombe la responsabilité du respect du mode d'emploi ainsi que des prescriptions et règlements de sécurité en vigueur.

Pour l'installation et l'exploitation de dispositifs d'ARRÊT D'URGENCE, les exigences suivantes doivent être respectées et une évaluation des risques doit être menée en vue d'une utilisation en bonne et due forme:

- EN ISO 13849-1:2015
- EN ISO 13850:2015
- EN ISO 13849-2:2012
- EN 60204-1/A1:2009

(D) **3. Produktbeschreibung**

Aufbau: Die Not-Halt-Befehlsgeräte bestehen aus einer Kombination von Betätigern mit einem oder mehreren Schaltelementen. Die Not-Halt-Befehlsgeräte gibt es als Einbauversion oder in einem Gehäuse verbaut. Die Betätigung erfolgt durch Drücken, die Entriegelung erfolgt je nach Variante entweder durch:

- Drehbewegung in beide Richtungen nach links oder nach rechts
- Ziehen entgegen der Betätigungsrichtung

"Aktiv/Inaktiv"-Varianten: "Aktiv": beleuchtet, rot, Not-Halt Funktion gegeben; "Inaktiv": unbeleuchtet, transparent, keine Not-Halt Funktion.

(GB) **3. Product description**

Design: An EMERGENCY STOP button is an assembly of actuator combined with one or more contact blocks. EMERGENCY STOP buttons are available either as a panel mounting version or installed in a separate housing. They are operated by pressing. Unlatching is done by one of two methods:

- Turning in either direction
- Pulling against the direction of operation

"Aktiv/Inaktiv"-Variants: "Aktiv": illuminated red, Emergency Stop function given; "Inaktiv": not illuminated, transparent, no Emergency Stop function.

(F) **3. Description de produit**

Structure: Les boutons-poussoirs d'ARRÊT D'URGENCE sont composés d'une combinaison d'actionneurs ou de plusieurs éléments de commutation. Les boutons-poussoirs d'ARRÊT D'URGENCE sont disponibles en version intégrable ou installés dans un boîtier.

L'actionnement s'effectue par appui sur ces derniers. Selon la variante, le déverrouillage s'effectue soit par:

- Un mouvement de rotation dans les deux directions, soit vers la gauche, soit à droite
- Soit en tirant dans la direction opposée de la direction d'actionnement

"Aktiv/Inaktiv"-Variantes: "Aktiv": lit rouge, d'arrêt d'urgence fonction donné; "Inaktiv": pas lit, transparent, pas de d'arrêt d'urgence fonction.

Produkt Product Produit	Einbau Ø mm Mounting Ø mm Montage Ø mm	Betätiger Actuator Actionneur	Schaltelement Contact block Elément de commutation
LUMOTAST 16	Ø 16,2	1.15.213.001/0000 1.15.213.103/0000 1.15.213.002/0000 1.15.213.104/0000 1.15.213.003/0000 1.15.213.301/0000 1.15.213.004/0000 1.15.213.302/0000 1.15.213.011/0000 1.15.213.303/0000 1.15.213.012/0000 1.15.213.304/0000 1.15.213.013/0000 1.15.213.311/0000 1.15.213.014/0000 1.15.213.312/0000 1.15.213.051/0000 1.15.213.313/0000 1.15.213.052/0000 1.15.213.314/0000 1.15.213.053/0000 1.15.213.401/0000 1.15.213.054/0000 1.15.213.402/0000 1.15.213.061/0000 1.15.213.403/0000 1.15.213.062/0000 1.15.213.404/0000 1.15.213.063/0000 1.15.213.411/0000 1.15.213.064/0000 1.15.213.412/0000 1.15.213.101/0000 1.15.213.413/0000 1.15.213.102/0000 1.15.213.414/0000	integriert / incl.
LUMOTAST 22	Ø 22,3	1.15.105.002/0000 1.15.105.032/0000 1.15.105.012/0000 1.15.105.112/0000 1.15.105.022/0000	integriert / incl.
LUMOTAST 25	Ø 16,2	1.15.154.006/0301 1.15.154.016/0301	integriert / incl.
RAMO 22	Ø 22,3	1.10.031.001/0000 1.10.031.004/0330 1.10.031.022/0330 1.10.031.101/0000	integriert / incl.
RAMO 30	Ø 30,3	1.11.031.001/0000 1.11.031.004/0330 1.11.031.022/0330 1.11.031.101/0000	integriert / incl.

(D) **Tabelle 3.1** Weitere technische Daten sind dem Katalog zu entnehmen.

(GB) **Table 3.1** For additional technical data, please refer to the catalogue.

(F) **Tableau 3.1** Pour les autres caractéristiques techniques, voir catalogue.

The information in this data sheet only contains general descriptions and / or performance features, which may not apply precisely as described to the respective application, and which my change due to further product enhancements. The technical data, illustrations and other information about our products are the mere results of individual technical testing. These descriptions and other product features are only binding if they expressly agreed upon at the time of the conclusion of a binding contract. In all other cases, we reserve the right to make technical changes as well as changes of availability. Pictures and other graphic illustrations are approximations only. All product names may be trademarks or brand names of the RAFI Group or any other sub-supplier of RAFI. The use of such by any third parties for their own purposes may infringe the rights of the respective entity holding those rights.

RAFI GmbH & Co. KG

Ravensburger Str. 128-134
88276 Berg / Ravensburg
Germany
www.rafi-group.com,
info.headquarters@rafi-group.com