

TECHNICAL OVERVIEW

J7201A/B/C Attenuation Control Units DC to 6/18/26.5 GHz

0 to 101/121 dB attenuation range, 1 dB step size

Key Features

- Attenuation sweep function enables the selection of application-specific dwell time and attenuation values
- LXI Class C compliance provides GPIB, USB and LAN connectivity for easy remote integration
- 0.03 dB insertion loss repeatability typical per section for the entire 5 million cycles ensures accuracy and reduces calibration intervals
- Excellent attenuation accuracy and flatness ensure precise measurements
- Relative attenuation step function allows attenuation relative to any value
- Keypads and rotary knob control provide fast and easy attenuation setting

Description

Keysight Technologies J7201A/B/C attenuation control units increase the efficiency and throughput of the benchtop and ATE testing. The instrument provides an ideal solution for R&D and manufacturing engineers in wireless communications, tasked with designing, validating and manufacturing multi-technologies wireless communication component and devices such as WiFi, WLAN components and mobile handset base transceiver station (BTS) handover testing. These standalone instruments offer a user-defined attenuation sweep function which lets you set the desired attenuation range, step size, number of cycles and attenuation configuration based on your application's requirements.

Exceptional insertion loss repeatability per section and excellent attenuation accuracy and flatness over the entire operating life of 5 million cycles ensure precise measurements and reduce calibration intervals reducing the cost of test.

Designed in a half-rack, 2 unit high-form factors, the J7201A/B/C are packed with features and functions that are easily accessible via the soft keys and the rotary knob located on the front panel. LXI Class C compliancy provides GPIB, USB and LAN connectivity for easy remote control and triggering through a full-featured graphical web interface. Calibration data is stored in the instrument's memory for fast, easy retrieval.

KEYSIGHT TECHNOLOGIES

Application

Mobile receiver sensitivity test



Figure 1. Simplified test setup for mobile receiver sensitivity test using a golden radio



Figure 2. Simplified test setup for mobile receiver sensitivity test using a communication test set

Figure 1 and 2 show test setups for measuring receiver sensitivity. The receiver sensitivity test measures a receiver's performance using known signal conditions including: modulation and coding type, SNR, and power input levels. Using the specified conditions, receivers must be able to decode data bits with a specified bit error rate (BER) at different input power levels.

Many manufacturers have opted to use costly, high-end signal generators to get accurate power levels across a wide range. However, although these instruments usually provide > 0.4 dB accuracy, at lower power levels where receiver sensitivity tests are being carried out, the accuracy is often ± 1 dB. The power level of the test signal is important as a small change in the input power level can greatly affect the BER performance of the receivers. For more information, refer to the application note Power Accuracy in Receiver Sensitivity Test, literature number 5989-8768EN.

Figures 1 and 2 show you how to use an external attenuator to get fast and accurate power levels for mobile receiver sensitivity test. The J7201A/B/C attenuation control units are used with a signal generator to provide extremely accurate power measurements. Calibration can be done at one relatively high-power level, for instance 0 dBm, and then the signal level is stepped down through the attenuation control unit. In this way, the power level from the source can be kept at a constant eliminating power level linearity problems in the test signal. Corrected attenuation data is provided at each attenuation level of the attenuation control unit's frequency range (from DC to 6/18/26.5 GHz), this gives you the exact input power level for each DUT. This also ensures test signal accuracy at very low power levels where a slight difference in the input test signal level has an adverse effect on DUT performance. The attenuation control unit's superb repeatability per section ensures the accuracy and stability of the input power.

Generally, this method improves amplitude accuracy, reduces the output noise floor of the test stimulus, and ensures a consistent and linear performance of the input signal regardless of its level. Because the packet error rate (PER) and frame error rate (FER) are highly sensitive to the input power level, this will have high impact on the yield of the receiver test.

Specifications

Specifications describe the instrument's warranted performance. Supplemental and typical characteristics are intended to provide information useful in applying the instrument by giving typical, but not warranted performance parameters

Specification	J7201A	J7201B	J7201C
Frequency range	DC to 6 GHz	DC to 18 GHz	DC to 26.5 GHz
Attenuation range	0 to 121 dB	0 to 121 dB	0 to 101 dB
Attenuation step size	1, 5, 10 dB		
Insertion loss (at 0 dB)	2.5 dB	DC to 6 GHz: 2.5 dB 6 to 18 GHz: 5.0 dB	DC to 6 GHz: 2.5 dB 6 to 18 GHz: 4.0 dB 18 to 26.5 GHz: 5.0 dB
Return loss (VSWR)	14 dB (1.50)	DC to 6 GHz: 14 dB (1.50) 6 to 18 GHz: 10 dB (1.90)	DC to 6 GHz: 16 dB (1.35) 6 to 18 GHz: 11 dB (1.78) 18 to 26.5 GHz: 7 dB (2.61)
RF repeatability per section	0.03 dB typical		
Maximum input power	1 W (+30 dBm)		
Switching speed	20 ms		
Operating life	5 million cycles		
Connectivity	GPIB/USB/LAN (LXI Class C)		
Connector type	SMA/Type-N (f)	SMA/Type-N (f)	3.5 mm (f)

J7201A/B/C Supplemental Specification and Characteristics

Supplemental characteristics are intended to provide useful information. They are typical but non-warranted performance parameters

Supplemental information	
Power	100 to 240 Vac, automatic selection, 50/60 Hz 50 VA maximum Main supply voltage fluctuations are not exceeding 10% of the nominal supply voltage

Connector type	Pin Depth
Type-N (f)	4.750 to 5.258 (mm) 0.187 to 0.207 (inch)
SMA (f)	0.000 to -0.254 (mm) 0.000 to -0.010 (inch)
3.5 mm (f)	0.000 to -0.076 (mm) 0.000 to -0.003 (inch)

Attenuation Accuracy

(+/- dB; referenced from 0 dB setting)

J7201A/B Attenuation setting for step ranges (dB)	DC to 6 GHz	6 to 18 GHz
1 to 2	0.30	0.70
3 to 4	0.40	0.70
5 to 6	0.50	0.80
7 to 10	0.60	0.80
11 to 20	0.70	1.40
21 to 40	1.20	2.00
41 to 60	1.80	2.80
61 to 80	2.40	3.60
81 to 100	3.00	4.40
101 to 121	3.30	5.30

J7201C attenuation setting for step ranges (dB)	DC to 18 GHz	18 to 26.5 GHz
1 to 2	0.40	0.55
3 to 6	0.55	0.75
7 to 10	0.70	0.80
11 to 20	1.20	1.40
21 to 40	1.40	1.60
41 to 60	1.90	2.50
61 to 80	2.50	2.70
81 to 101	3.70	4.00

Additional Functions and Features

Function	Description
Attenuation sweep function	Provides user-defined parameter setting for application-specific testing Key parameter settings: – Delay time before START – Attenuation range – Attenuation step size (1 to 10 dB; 1 dB incremental) – Attenuation start, stop and dwell time (100 ms to 10 s; 100 ms incremental) – Number of attenuation cycles (1000 cycles maximum) Forward and backward attenuation cycles
Relative attenuation step function	Enables testing relative to any preset attenuation value
Display of data correction value	Displays correction value for attenuation using stored calibration data

Typical Performance

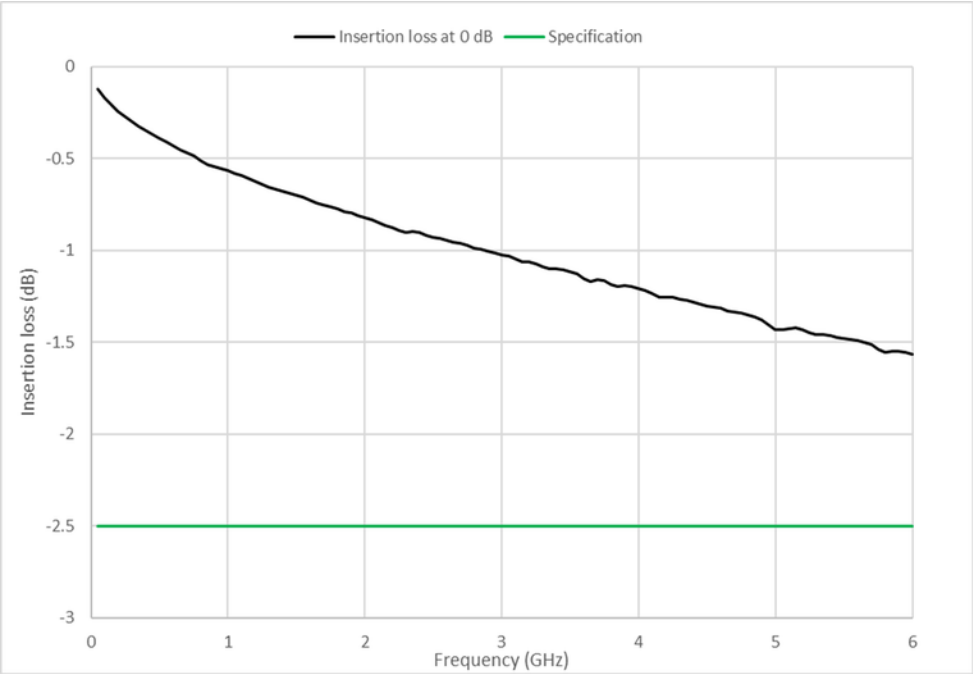

Figure 3. Keysight J7201A attenuation control unit insertion loss (at 0 dB) versus frequency

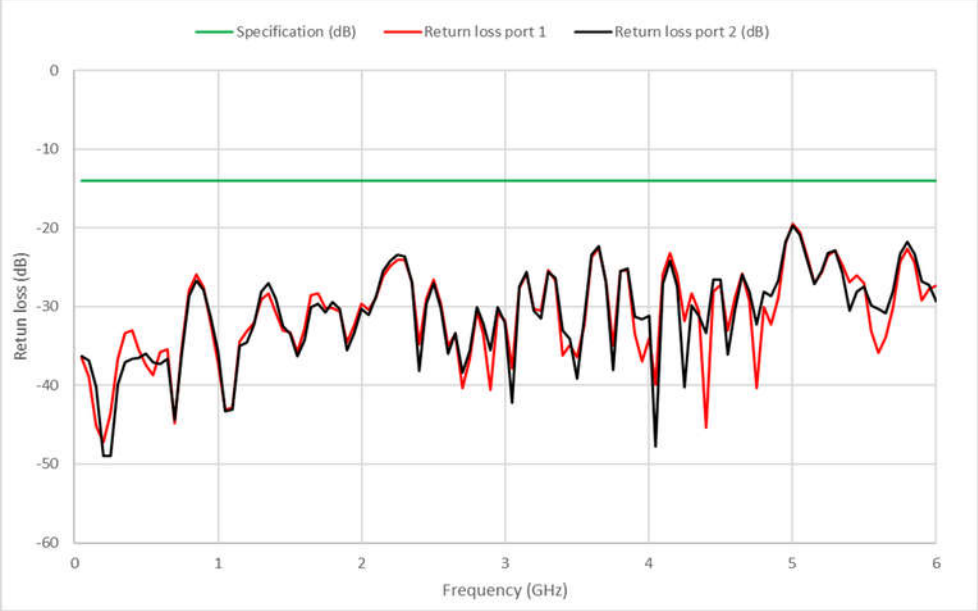

Figure 4. Keysight J7201A attenuation control unit return loss versus frequency

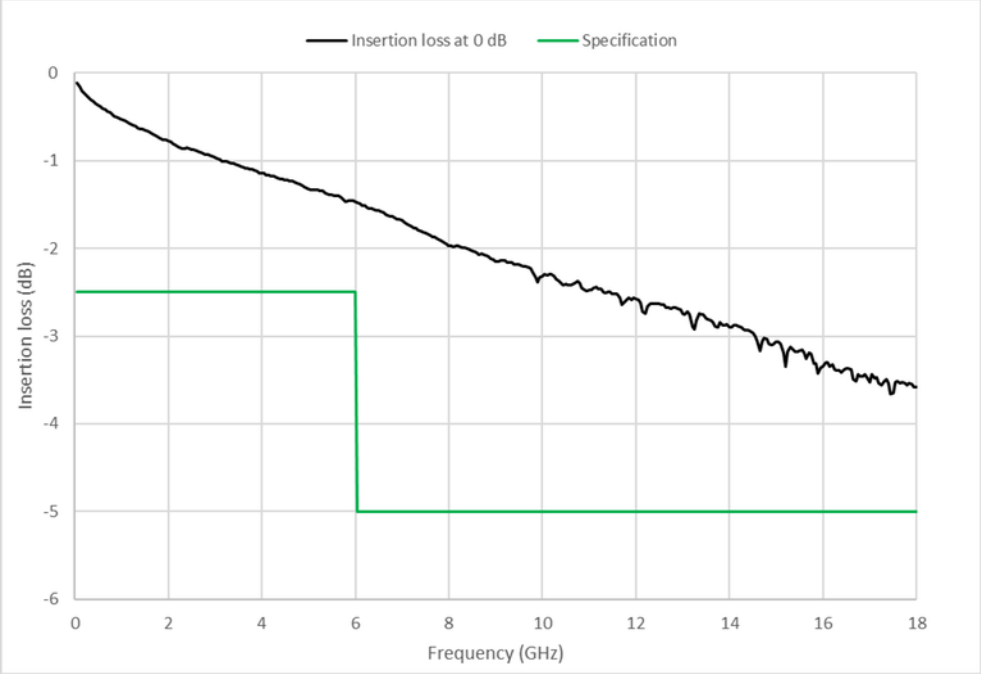

Figure 5. Keysight J7201B attenuation control unit insertion loss (at 0 dB) versus frequency

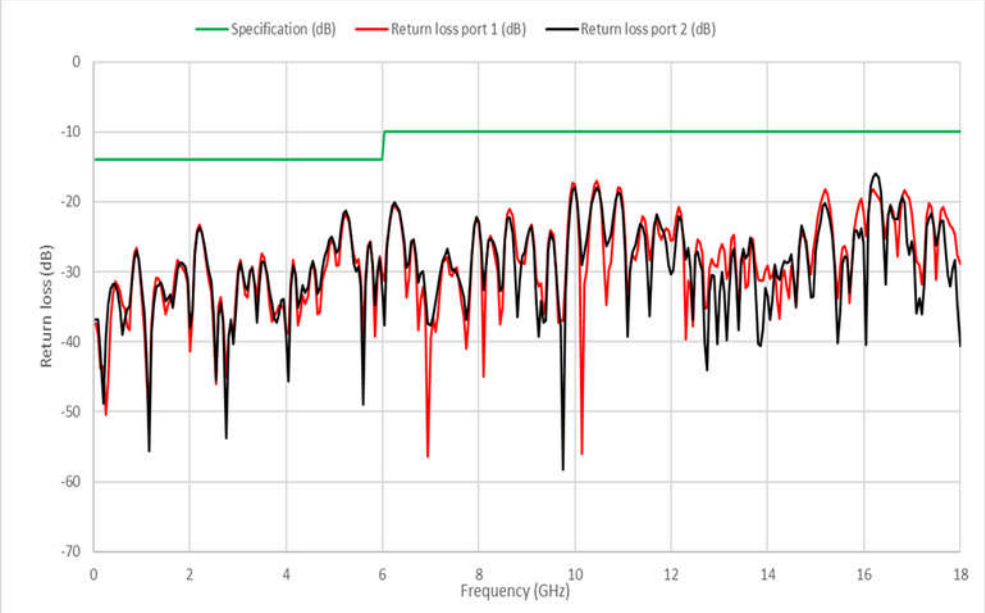

Figure 6. Keysight J7201B attenuation control unit return loss versus frequency

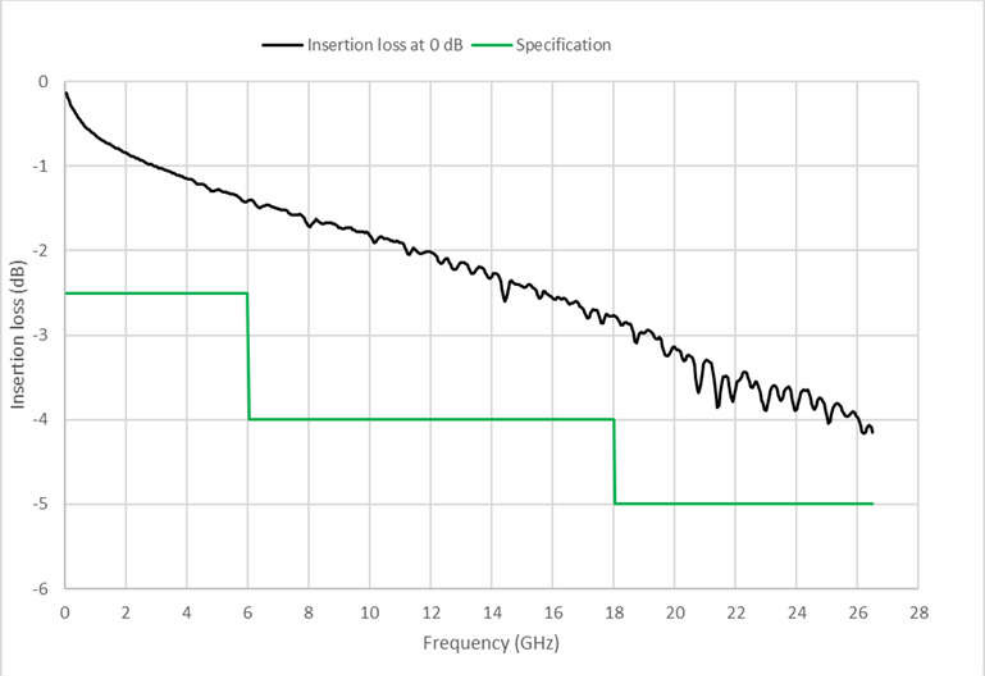

Figure 7. Keysight J7201C attenuation control unit insertion loss (at 0 dB) versus frequency

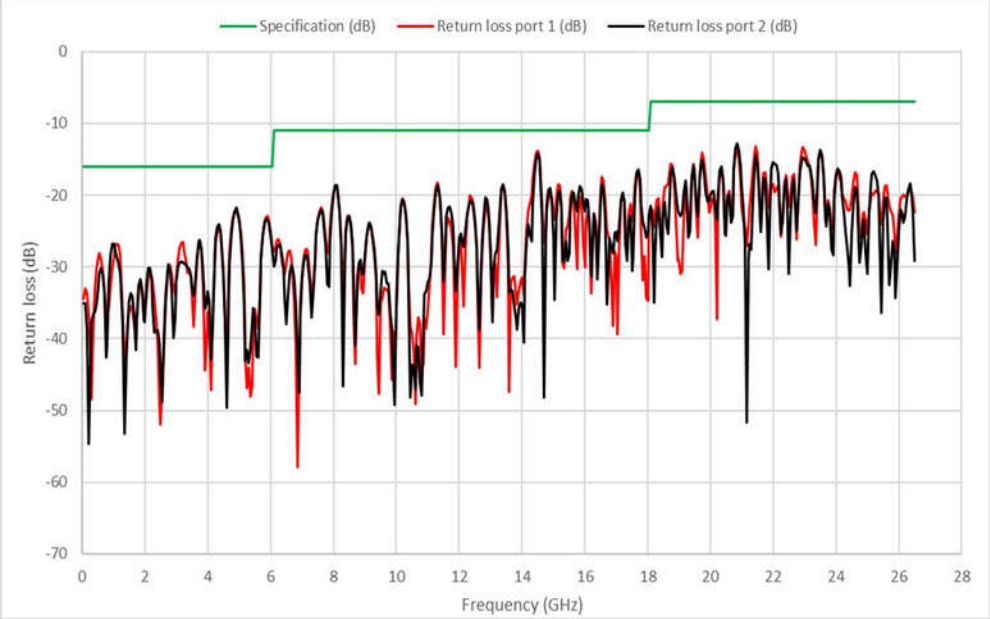

Figure 8. Keysight J7201C attenuation control unit return loss versus frequency

Environmental Specifications

Keysight J7201A/B/C attenuation control units are designed for indoor use and in an area with low condensation. They are fully complying with Keysight Technologies' product operating environmental specifications. The following summarizes the environmental specifications for these products.

Environmental specifications	Description
Supply voltage	
Voltage range	100 to 240 Vac (Main supply voltage fluctuation up to +/-10% of nominal voltage)
Frequency	50/60 Hz
Current rating	50 VA
Overvoltage category	Cat II
Temperature	
Operating	0 °C to +50 °C
Storage	-40 °C to +70 °C
Humidity	
Operating	95% RH at 40 °C, decreases linearly to 45 %RH at 50 °C, non-condensing, 5 days cyclic
Storage	90% RH @ 65 °C, 25 hours
Condensing	95% RH at 40 °C, 5 hours (condensation 15 minutes)
Shock	
End-user handling	Half-sine: 203 ms duration, 60 in/s (1.6 ms) delta-V
Bench handling	Per MIL-PRF-28800F
Functional	Half-sine: 11 ms duration, 30 grms
Transportation	Trapezoital: 18-22 ms duration, 337 in/s (8.56 ms) delta-V
Vibration	
Operating	Random: 0.21G rms, 5 to 500 Hz, 10 min/axis
Survival	Random: 2.09G rms, 5 to 500 Hz, 10 min/axis Swept-sine: 0.5G rms, 5 to 500 Hz, 10 min/axis
ESD immunity	
Contact discharge	6 kV per IEC 61000-4-2
Air discharge	15 kV per IEC 61000-4-2
Altitude	
Operating	< 4,572 meters (< 15,000 feet)
Non-operating	< 4,572 meters (< 15,000 feet)
Pollution	
Degree	2

Mechanical Information

Dimensions are in mm (inches) nominal, unless otherwise specified

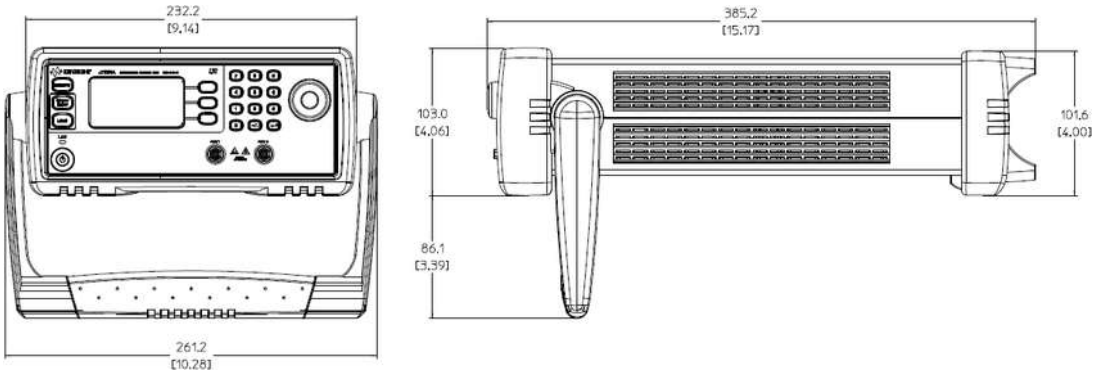

J7201A/B product dimensions (SMA (f) connectors)	
Net weight	With rubber bumper and handle: 3.7 kg (8.2 lbs) Without rubber bumper and handle: 3.3 kg (7.3 lbs)
Dimension (H x W x D) with handle and rubber bumper	189.1 mm x 261.2 mm x 385.2 mm (7.25 inches x 10.28 inches x 15.17 inches)
Dimension (H x W x D) without handle and rubber bumper	88.0 mm x 212.72 mm x 361.55 mm (3.46 inches x 8.37 inches x 12.46 inches)

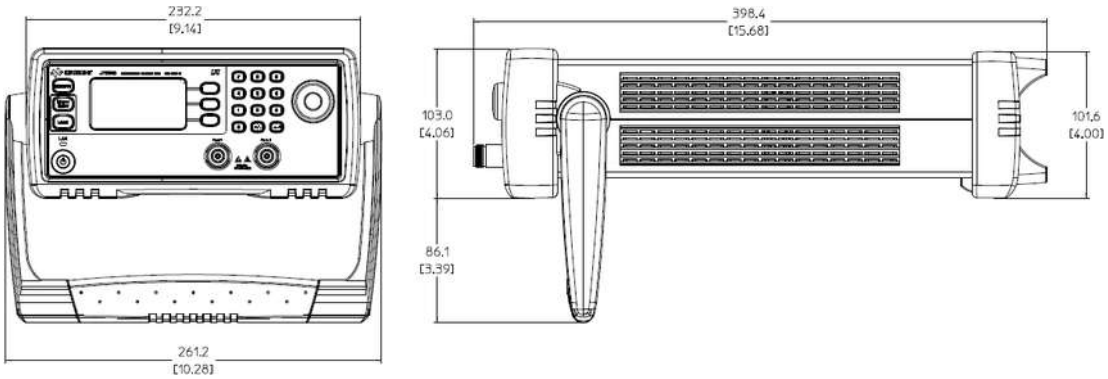

J7201A/B product dimensions (Type-N (f) connectors)	
Net weight	With rubber bumper and handle: 3.8 kg (8.4 lbs) Without rubber bumper and handle: 3.4 kg (7.5 lbs)
Dimension (H x W x D) with handle and rubber bumper	189.1 mm x 261.2 mm x 398.40 mm (7.25 inches x 10.28 inches x 15.68 inches)
Dimension (H x W x D) without handle and rubber bumper	88.0 mm x 212.72 mm x 374.68 mm (3.46 inches x 8.37 inches x 14.75 inches)

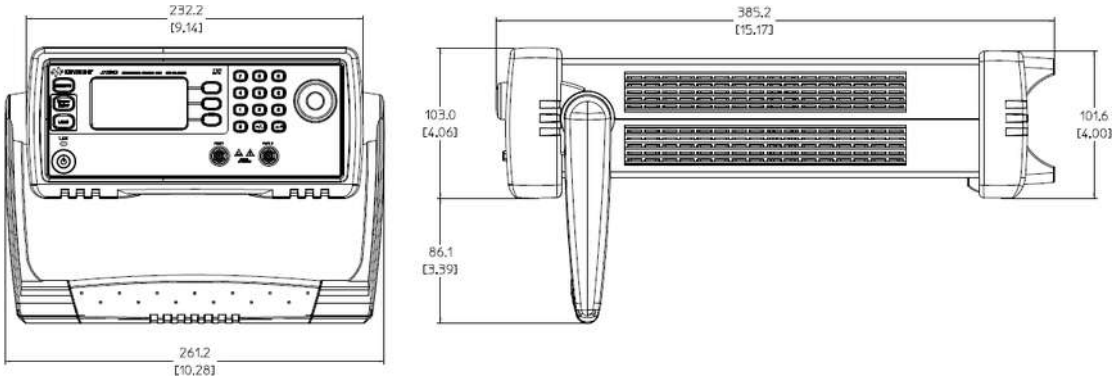

J7201C product dimensions (3.5mm (f) connectors)	
Net weight	With rubber bumper and handle: 3.8 kg (8.4 lbs) Without rubber bumper and handle: 3.4 kg (7.5 lbs)
Dimension (H x W x D) with handle and rubber bumper	189.1 mm x 261.2 mm x 385.2 mm (7.25 inches x 10.28 inches x 15.17 inches)
Dimension (H x W x D) without handle and rubber bumper	88.0 mm x 212.72 mm x 361.55 mm (3.46 inches x 8.37 inches x 12.46 inches)

Ordering Information

Description	
J7201A	**Attenuation control unit, DC to 6 GHz, 0 to 121 dB**
Option 001	Type-N (f) connector
Option 002	SMA (f) connector
Option UK6	Commercial calibration certificate with test data
J7201B	**Attenuation control unit, DC to 18 GHz, 0 to 121 dB**
Option 001	Type-N (f) connector
Option 002	SMA (f) connector
Option UK6	Commercial calibration certificate with test data
J7201C	**Attenuation control unit, DC to 26.5 GHz, 0 to 101 dB**
Option UK6	Commercial calibration certificate with test data

Related Literature

Power Accuracy in Receiver Sensitivity Test, Application Note, literature number 5989-8768EN.

Web link

www.keysight.com/find/J7201

More RF & Microwave Test Accessories

For selection of more than 300 models of various type of RF and microwave test accessories with operating frequency up to 110 GHz. Go to: www.keysight.com/find/mta

Learn more at: www.keysight.com

For more information on Keysight Technologies' products, applications or services, please contact your local Keysight office. The complete list is available at: www.keysight.com/find/contactus

KEYSIGHT TECHNOLOGIES

This information is subject to change without notice. © Keysight Technologies, 2019 - 2020, Published in USA, December 22, 2020, 5992-4317EN